Frontiers of Physics
https://doi.org/10.1007/s11467-021-1117-2
Front. Phys.
17(2), 22505 (2022)

RESEARCH ARTICLE

Wide and fast-frequency tuning for a stabilized diode laser

Yunfei Wang[1], **Yuqing Li**[1,2,†], **Jizhou Wu**[1,2], **Wenliang Liu**[1,2], **Peng Li**[3], **Yongming Fu**[3], **Jie Ma**[1,2,‡], **Liantuan Xiao**[1,2], **Suotang Jia**[1,2]

[1] *State Key Laboratory of Quantum Optics and Quantum Optics Devices, Institute of Laser Spectroscopy, College of Physics and Electronics Engineering, Shanxi University, Taiyuan 030006, China*
[2] *Collaborative Innovation Center of Extreme Optics, Shanxi University, Taiyuan 030006, China*
[3] *College of Physics and Electronic Engineering, Shanxi University, Taiyuan 030006, China*
Corresponding authors. E-mail: †lyqing.2006@163.com, ‡mj@sxu.edu.cn
Received June 27, 2021; accepted September 22, 2021

External-cavity diode laser (ECDL) has important applications in many fundamental and applied researches. Here we report a method to fast and widely tune the frequency of a stabilized ECDL. The beat frequency between the ECDL and a frequency-locked reference laser is identified by the voltage-controlled oscillator contained in a phase detector, whose output voltage is subtracted from the flexibly controlled PC signal to generate an error signal for stabilizing the ECDL. The output frequency of the stabilized ECDL can be shifted at a short characteristic time of ~ 150 μs within a range of ~ 620 MHz. The wide and fast-frequency tuning achieved by our method is compared with other previous works. We demonstrated the performance of our method by the efficient sub-Doppler cooling of Cs atoms with the temperature as low as 6 μK.

Keywords external-cavity diode laser, frequency stabilization, laser cooling, interaction of laser with atoms

1 Introduction

Methods of stabilizing the frequency of an external-cavity diode laser (ECDL) play irreplaceable roles in many fundamental and applied researches that associated with quantum entanglement and storage [1–4]. In these experiments, the precise and effective manipulation of atoms highly depends on the stability of laser frequency as well as the wide and fast-frequency tuning for the output of a stabilized laser. Various kinds of spectroscopy technologies have been studied theoretically and experimentally to stabilize the frequency of ECDL. Among most of these methods, the laser frequency can be stabilized on the certain atomic or molecular resonant transition line [5, 6], the resonant frequency of a cavity [7, 8], the optical frequency comb [10], and also using the injection locking technique [11]. Optical phase-locked loop (OPLL) has been also used to stabilize a laser to another frequency-locked reference laser [12–14].

In many experiments on the interaction of laser with atoms, the output frequency of a stabilized ECDL needs to be shifted quickly and widely from one experimental phase to the next. Especially for the experiments of laser cooling and manipulating atoms, the frequency shift needs to be fast and widely changed in many different experimental stages, such as the magneto-optical trap, the optical molasses and the optical pumping [15]. The double pass of (acousto-optic modulator) AOM, in which the double pass scheme improves the alignment with different frequency shifts compared to the single pass, has been widely used to continuously shift laser frequency by a few tens of MHz [16]. However, there is a large loss in the laser power and the loss will increase with the increasing frequency shift. Electro-optic modulators (EOMs) have been used after the stabilized ECDL to shift the frequency by a few GHz [17, 18], but the EOM-modulated laser contains different frequencies, which cannot be separated spatially and may cause the undesirable transitions in the experiments of atoms. Although the OPLL was demonstrated to shift the output frequency of the stabilized slave laser on the basis of the well-designed servo electronic circuit [13, 14], the range of frequency shift has to compromise a fast jump time.

Here an efficient method has been demonstrated to fast and widely tune the output frequency of a stabilized ECDL. The voltage-controlled oscillator (VCO) in a phase detector is used to recognize the beat frequency between the ECDL and a frequency-locked reference laser. The error signal is obtained by subtracting the output voltage of phase detector from the PC signal. The frequency of a stabilized ECDL can be fast and widely tuned by controlling

* This article can also be found at http://journal.hep.com.cn/fop/EN/10.1007/s11467-021-1117-2.

© Higher Education Press 2022

the PC signal flexibly. The results based on this method are quantitatively compared to other works [13, 14]. Our method has been used in the sub-Doppler cooling of Cs atoms to obtain a more efficient cooling. Our method has significant applications in the experiments of laser interacting with atoms.

2 Experimental setup

Experimental schematic and setup for the fast and wide tuning of the output frequency of a stabilized ECDL are illustrated in Fig. 1. Laser 1 at the output wavelength of ~ 852.35 nm is regarded as the reference laser, which has a power of ~ 52 mW after the optical isolator. About 4 mW power from the reference laser is used for the frequency stabilization by the polarization spectroscopy (PS) [19]. To lock the frequency of reference laser precisely, we use the double-pass modulation of AOM and the feedback circuit to stabilize the laser power used for the stable PS. A small fraction of laser power is monitored by the PD1, and is used to stabilize the laser beam for a stable error signal. A strong pump beam saturates a transition of Cs atoms in the vapor cell and the weak probe beam probes the change in the atomic population. After the vapor cell two separated weak probe lasers are recorded by an amplified balanced photodetector (BPD), whose output signal is regarded as the error signal of reference laser. When the offset voltage of PZT in the reference laser is scanned, the error signal is shown in Fig. 2(a). The frequency-shifted laser beam through the double modulation of AOM is locked on the $6S_{1/2}, F = 4 \rightarrow 6P_{3/2}, F = 5$ cycling transition of Cs atoms. The direct output of the frequency-locked reference laser is detuned by $\Delta_{ref} = +\ 220$ MHz referring to the cycling transition, and the linewidth of reference laser is about 1 MHz.

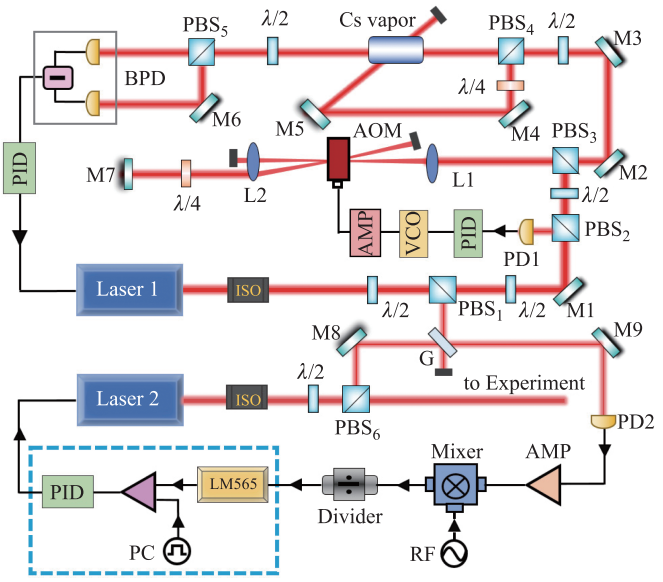

Fig. 1 Experimental setup for the fast and wide tuning of the frequency of a stabilized ECDL. The reference laser (laser 1) is locked by a stable polarization spectroscopy (PS), which is obtained by stabilizing the power of a weak laser beam used for PS. ECDL (laser 2) interferes with the reference laser on a fast photodiode. The beat frequency is divided by 4080, and then is identified by the VCO contained in the phase detector LM565. The error signal is fed to the current and PZT ports of ECDL by two PIDs. The output frequency of the stabilized ECDL can be fast and widely tuned by controlling the PC signal. ISO, optical isolator; G, glass; $\lambda/2$, half-wave plate; M, mirror; PBS, polarization beam splitter; PD, photodetector; VCO, voltage-controlled oscillator; AMP, amplifier; AOM, acousto–optic modulator; L, lens; $\lambda/4$, quarter-wave plate; BPD, amplified balanced photodetector.

ECDL (laser 2) has an output power of ~ 50 mW and the weak beam splitted by a PBS goes through a glass and mixes with the beam of the frequency-locked reference laser. The beat note is obtained by interfering these two beams on a fast photodiode (PD2), as shown in Fig. 1. The beat note is sent to a frequency divider with $f_b' = f_b \div 4080$, and then f_b' is identified by the VCO in a phase detector (LM565). If f_b' locates in the frequency range of VCO from 62 kHz to 228 kHz, the phase detector will generate a certain voltage in the range from -10 V to $+10$ V. As a result, the beat frequency f_b can be tuned in a range of $f_b \approx -252 \sim -930$ MHz. To extend the tunable range of beat frequency, which is originally limited by the frequency range of VCO in the phase detector, a frequency mixer is added before that the beat frequency entering the phase detector. For example, this has significant applications in the frequency stabilization of trapping and repumping lasers to the same frequency-locked reference laser in the laser cooling experiments, where the trapping and repumping lasers have a large frequency difference in the microwave range.

The output voltage of phase detector is sent to an adder, and then is subtracted from a PC signal to obtain the error signal for ECDL. When we scan the offset voltage of PZT in the ECDL, the error signal shows a linear curve, as shown in Fig. 2(a). The error signal is fed back to the current and PZT ports of ECDL with the different polarities. The linewidth of the stabilized ECDL is about 1.8 MHz. Figure 2(b) shows the square root of Allan variance $\sigma(\tau)$ for the free-running ECDL and for the stabilized ECDL, respectively. Here the $\sigma(\tau)$ is derived from the error signal as a function of τ and describes the frequency stability of ECDL. Allan variance is defined as

$$\sigma^2(\tau) = \frac{1}{N_d - 1} \sum_{i=1}^{N-1} (\overline{y_i} - \overline{y_{i-1}})^2, \tag{1}$$

where N_d is the number of groups divided based on the period τ for the data of error signal and $\overline{y_i}$ is the averaged value of the ith group data. The stabilized ECDL exhibits a good frequency stability by the lower σ with a long τ.

According to the scheme to obtain the error signal of

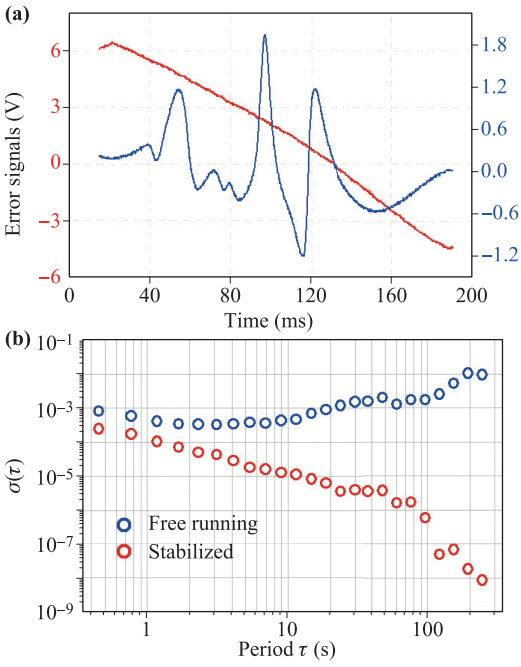

Fig. 2 **(a)** The error signal (blue curve) is obtained in the PS by scanning the offset voltage of PZT in the reference laser. The error signal (red curve) is obtained by scanning the offset voltage of PZT in the ECDL. **(b)** The square root of Allan variance $\sigma(\tau)$ is used to describe the frequency stability for the free-running (blue circles) and stabilized (red circles) ECDL.

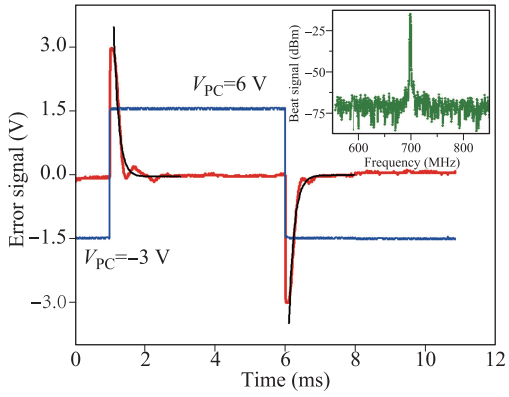

Fig. 3 The response (red curve) of error signal of a stabilized ECDL to a square wave signal (blue curve), which is adjusted between −3 V and 6 V. The characteristic time is obtained as $\tau_c \simeq 150$ μs by fitting the variation of error signal to the e^{-t/τ_c} decay (black curves). The inset shows the locked beat note, which is obtained by using a spectrum analyzer.

ECDL, we can change the beat frequency and the output frequency of the stabilized ECDL by flexibly controlling PC signal. In order to fast and widely tune the output frequency of a stabilized ECDL, we add a feedforward part in the electronic circuit. The PC signal is directly sent to the current port with the appropriate proportion. All electronic elements are very common and accumulated on a PCB board after the dividers. In detail, these electronic elements contain the feedforward circuit, the phase detector, two common PIDs with different polarities for the current and PZT ports, and the adders used for the adding and reversing functions.

3 Experimental results and discussion

Figure 3 shows a fast response of the error signal to a periodic square wave signal, which is provided by the PC. The e^{-t/τ_c} decay is used to fit the variation of the error curve, where τ_c is defined as a characteristic time to describe the speed of frequency jumping. When the PC signal is jumped to 6 V from −3 V, the beat frequency varies from −300 MHz to −700 MHz and the output frequency of the stabilized ECDL is downshifted by 400 MHz. The fitted characteristic time is $\tau_c \sim 150$ μs. The same τ_c is also obtained when the PC signal returns to −3 V from 6 V, and the frequency is upshifted by 400 MHz. We also measure the τ_c for the different frequency shifts, we find that the τ_c nearly keeps the same within the tunable range of $\sim$ 620 MHz. Although the phase detector allows the maximum range of frequency shift $\sim$ 680 MHz, which is induced by adjusting the PC signal from −10 V to 10 V, we find the frequency cannot be fast shifted when the beat frequency is tuned to the two sides of the maximum range.

We will now compare our result with two previous works, in which the beat note in the OPLL is modified by means of a local oscillator in an appropriate RF-mixer [13, 14]. The output frequency of the stabilized ECDL can be tuned in a range of 200 MHz by using both the low-pass filter and the phase advance circuit to directly feed the modified beat note for the ECDL [13]. The frequency jump of 50 MHz was demonstrated in less than 200 μs. Another frequency dependent error signal is derived from the amplitude response of an electronic high-pass filter to the modified beat note [14]. The time needed for the error signal to return to a value near zero after a frequency shift of 56 MHz is measured as 6 ms. In comparison, our method has a great advantage for fast shifting the output frequency of a stabilized ECDL in a larger range.

The output of the stabilized ECDL is coupled to an optical fiber for the sub-Doppler cooling of Cs atoms. The developed method has been used to fast and widely tune the frequency detuning δ of cooling laser. Figure 4 shows the dependence of the temperature T of atomic cloud after a 3 ms optical molasses cooling on the δ below the cycling transition of Cs atoms. Here a cold temperature of $T \sim 6$ μK is obtained by increasing the detuning to $\delta \sim -110$ MHz. The scaling law of $T = N^{1/3}\Omega/|\delta|^{3/2}$ is used for a good fit, where N is the number of atoms and Ω is the Rabi frequency of cooling laser [20]. Due to the short τ_c, we do not find any heating for the atomic sample

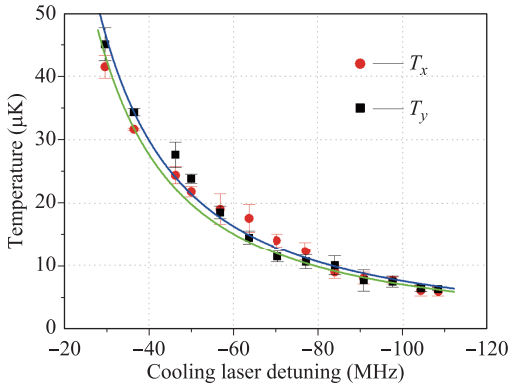

Fig. 4 The temperature of Cs atomic cloud after the 3-ms optical molasses cooling as a function of cooling laser frequency detuning relative to the $6S_{1/2}, F = 4 \rightarrow 6P_{3/2}, F = 5$ cycling transition of Cs atoms. The cooling laser is provided by a stabilized ECDL, whose output frequency can be shifted fast and widely. The red dots and blue squares are the measured temperatures of atoms in the horizontal and vertical directions, respectively. The solid lines are the fitting curves.

during the fast tuning of the laser frequency. The number of atoms after the optical molasses cooling is measured as $N \sim 6 \times 10^7$, and the variation of δ has little effect on the N. In our previous experiment [21], a maximum detuning of $\delta \sim -70$ MHz is achieved by the double pass of AOM (MT110-B50A1-IR) with the center frequency $\sim$ 110 MHz and the range of frequency shift $\sim \pm 25$ MHz, but the power of cooling laser after the optical fiber is decreased to a third. The optimized temperature was measured as 50 μK, and the relative high temperature is mainly attributed to the limited frequency detuning and the reduction of laser power. Thus the current method has a better cooling result.

4 Conclusion

In conclusion, we have experimentally demonstrated a method to realize the fast and wide tuning of the output frequency for a stabilized ECDL. The range of frequency shift covers all hyperfine transitions of D_2 for the alkali metal atoms and the fast tuning has no any heating in the optical molasses cooling of Cs atoms. Our method has several advantages. First, it could shift the frequency of a stabilized ECDL on a larger range than the double-pass modulation of AOM. Second, it does not cause any loss on the laser power as the AOM does. Finally, this simple method should work in a number of experiments on the interaction of light with atoms for many different atomic species.

Acknowledgements We thank Prof. Cheng Chin for his helpful suggestions. This work was financially supported by the National Key Research and Development Program of China (Grant No. 2017YFA0304203), the National Natural Science Foundation of China (Grant Nos. 61722507, 61675121, and 61705123), PCSIRT (No. IRT17R70), 111 Project (Grant No. D18001), the Shanxi 1331 KSC, the Program for the Outstanding Innovative Teams of Higher Learning Institutions of Shanxi (OIT), the Open Research Fund Program of the State Key Laboratory of Low-Dimensional Quantum Physics.

Data availability The data that support the findings of this study are available from the corresponding authors upon reasonable request.

References

1. I. Bloch, Quantum coherence and entanglement with ultracold atoms in optical lattices, *Nature* 453(7198), 1016 (2008)
2. W. L. Chen, K. M. Beck, R. Bücker, M. Gullans, M. D. Lukin, H. Tanji-Suzuki, and V. Vuletić, All-optical switch and transistor gated by one stored photon, *Science* 341(6147), 768 (2013)
3. H. N. Dai, B. Yang, A. Reingruber, X. F. Xu, X. Jiang, Y. A. Chen, Z. S. Yuan, and J. W. Pan, Generation and detection of atomic spin entanglement in optical lattices, *Nat. Phys.* 12(8), 783 (2016)
4. X. Y. Luo, Y. Q. Zou, L. N. Wu, Q. Liu, M. F. Han, M. K. Tey, and L. You, Deterministic entanglement generation from driving through quantum phase transitions, *Science* 355(6325), 620 (2017)
5. K. B. MacAdam, A. Steinbach, and C. Wieman, A narrow-band tunable diode laser system with grating feedback and a saturated absorption spectrometer for Cs and Rb, *Am. J. Phys.* 60(12), 1098 (1992)
6. J. Ma, L. R. Wang, Y. T. Zhao, L. T. Xiao, and S. Jia, Absolute frequency stabilization of a diode laser to cesium atom–molecular hyperfine transitions via modulating molecules, *Appl. Phys. Lett.* 91(16), 161101 (2007)
7. E. D. Black, An introduction to Pound–Drever–Hall laser frequency stabilization, *Am. J. Phys.* 69, 69 (2000)
8. J. I. Thorpe, K. Numata, and J. Livas, Laser frequency stabilization and control through offset sideband locking to optical cavities, *Opt. Express* 16(20), 15980 (2008)
9. B. L. Fan, W. Xiong, S. G. Wang, and L. J. Wang, A stabilized laser continuously tunable over a range of 1.5 GHz, *Rev. Sci. Instrum.* 87(11), 113101 (2016)
10. D. J. Jones, K. W. Holman, M. Notcutt, J. Ye, J. Chandalia, L. A. Jiang, E. P. Ippen, and H. Yokoyama, Ultralow-jitter, 1550-nm mode-locked semiconductor laser synchronized to a visible optical frequency standard, *Opt. Lett.* 28(10), 813 (2003)
11. H. Y. Ryu, S. H. Lee, and H. S. Suh, Widely tunable external cavity laser diode injection locked to an optical frequency comb, *IE EE Photonics Technol. Lett.* 22(14), 1066 (2010)

12. G. Santarelli, A.Clairon, S. N. Lea, and G. M. Tino, Heterodyne optical phase-locking of extended-cavity semiconductor lasers at 9 GHz, *Opt. Commun.* 104(4–6), 339 (1994)
13. L. Ricci, M. Weidemüller, T. Esslinger, A. Hemmerich, C. Zimmermann, V. Vuletic, W. König, and T. W. Hänsch, A compact grating-stabilized diode laser system for atomic physics, *Opt. Commun.* 117(5–6), 541 (1995)
14. G. Ritt, G. Cennini, C. Geckeler, and M. Weitz, Laser frequency offset locking using a side of filter technique, *Appl. Phys. B* 79(3), 363 (2004)
15. D. L. Jenkin, D. J. Mc Carron, M. P. Köppinger, H. W. Cho, S. A. Hopkins, and S. L. Cornish, Bose–Einstein condensation of ^{87}Rb in a levitated crossed dipole trap, *Eur. Phys. J. D* 65(1–2), 11 (2011)
16. E. A. Donley, T. P. Heavner, F. Levi, M. O. Tataw, and S. R. Jefferts, Double-pass acousto–optic modulator system, *Rev. Sci. Instrum.* 76(6), 063112 (2005)
17. D. M. S. Johnson, J. M. Hogan, S. W. Chiow, and M. A. Kasevich, Broadband optical serrodyne frequency shifting, *Opt. Lett.* 35(5), 745 (2010)
18. R. Kohlhaas, T. Vanderbruggen, S. Bernon, A. Bertoldi, A. Landragin, and P. Bouyer, Robust laser frequency stabilization by serrodyne modulation, *Opt. Lett.* 37(6), 1005 (2012)
19. C. P. Pearman, C. S. Adams, S. G. Cox, P. F. Griffin, D. A. Smith, and I. G. Hughes, Polarization spectroscopy of a closed atomic transition: Applications to laser frequency locking, *J. Phys. At. Mol. Opt. Phys.* 35(24), 5141 (2002)
20. S. Grego, M. Colla, A. Fioretti, J. H. Müller, P. Verkerk, and E. Arimondo, Acesium magneto–optical trap for cold collisions studies, *Opt. Commun.* 132(5–6), 519 (1996)
21. Y. Q. Li, G. S. Feng, R. D. Xu, X. F. Wang, J. Z. Wu, G. Chen, X. C. Dai, J. Ma, L. T. Xiao, and S. T. Jia, Magnetic levitation for effective loading of cold cesium atoms in a crossed dipole trap, *Phys. Rev. A* 91(5), 053604 (2015)