ENGINEERING Agriculture

Engineering Journals

REVIEW

2026 / Volume 13 / Issue 5 / 26695

Seedling pickup mechanisms for automatic transplanters: a review of technologies and future developments

Ruoyu ZHANG[1], Qizhi YANG (✉)[1], Lei LIU[1], Qingyu WU[1], Zhengliang LI[1], Addy MIN (✉)[2]

1 School of Agricultural Engineering, Jiangsu University, Zhenjiang 212013, China.
2 Bioproducts and Biosystems Engineering Department, University of Minnesota, St. Paul, MN 55108, USA.

KEYWORDS

Automatic transplanter, seedling pickup mechanism, transplanting damage

HIGHLIGHTS

- Reviews seedling pickup mechanisms, categorizing types and key challenges.
- Analyzes causes of mechanical seedling damage and current detection methods.
- Recommends developing smart, high-speed, low-damage future transplanters.

Received October 3, 2025;
Accepted March 13, 2026.

Correspondences: qzyrobot@126.com, minxx039@umn.edu

GRAPHICAL ABSTRACT

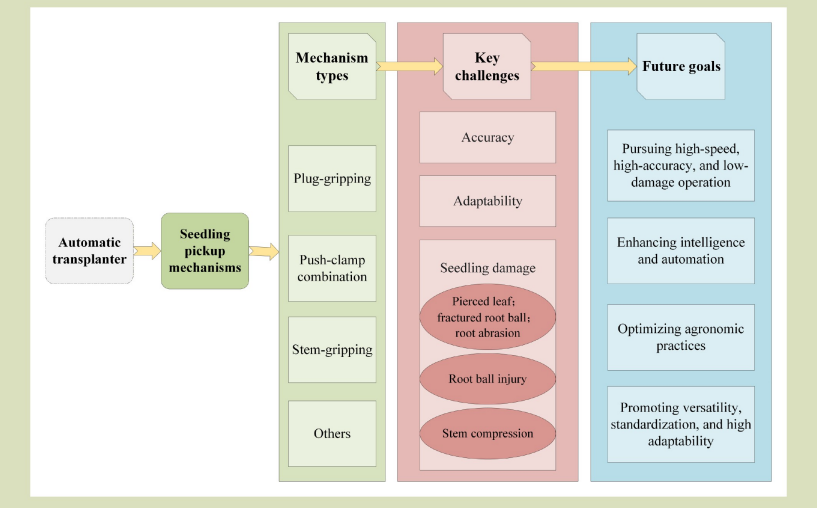

ABSTRACT

Research on fully automatic transplanting is important for improving operational efficiency, alleviating labor shortages and reducing costs. The design and optimization of the seedling pickup mechanism are central to this field of study. This paper presents an analysis of the current research status of seedling pickup mechanisms worldwide. It summarizes their working principles and categorizes them based on their operational targets into plug-gripping type, push-clamp combination type and stem-gripping type. The analysis reveals that existing seedling pickup mechanisms face challenges in the positioning accuracy of the gripper claws, as well as in the comprehensive success rate of accurate seedling pickup and placement. Also, they exhibit adaptability issues concerning the variety of crops, agronomic practices and terrain conditions. This paper also examines the inevitable problem of seedling damage, analyzing its causes and potential detection methods. It is recommended that future research should aim for high speed, high accuracy, low damage, intelligence and enhanced versatility. These efforts will facilitate

the subsequent optimization of seedling pickup mechanisms for fully automatic transplanters and promote their overall development.

© The Author(s) 2026. Published by Higher Education Press. This is an open access article under the CC BY license (http://creativecommons.org/licenses/by/4.0)

1 Introduction

According to statistics, the global annual vegetable production has reached 1.2 Gt, with China's vegetable cultivation area having reached over 22.6 Mha and showing a gradual upward trend annually[1]. Due to its high market demand, relatively high profitability and the complexity of the varieties involved, the vegetable industry is both a key focus and a major challenge in Chinese agricultural production. Common planting modes include direct sowing with plastic film mulching, seedling transplanting and soilless cultivation[2,3]. Among these, seedling transplanting has become the dominant method due to its significant advantages, such as reducing seed costs, facilitating concentrated management during the seedling stage, shortening the growth cycle in the field, effectively mitigating early adverse weather conditions and suitability for large-scale production[4]. At present, vegetable transplanting in China primarily relies on manual labor or semiautomatic machinery, which presents challenges such as low efficiency, labor shortages and high operational costs. Consequently, the research and development of fully automatic transplanters has become an imperative for the advancement of Chinese agriculture[5].

Research on fully automatic vegetable plug seedling transplanters began in the 1980s[6]. A global overview reveals that transplanters developed in European and North American countries, characterized by vast plains and large field plots, typically feature high operational efficiency, significant labor reduction, high stability, large scale and a high degree of automation, making them suitable for large-field operations. In contrast, countries such as Japan and South Korea, with smaller farmland plots, have developed transplanters that are often compact and highly efficient. However, their smaller dimensions can lead to structural complexity and higher costs[7]. Currently, commercialized transplanters in the Chinese market are primarily semiautomatic vegetable transplanters, which suffer from low efficiency and high labor intensity[8]. Meanwhile, the key technologies for fully automatic transplanters in China are not yet mature[9], with the vast majority remaining at the prototype stage. Due to distinct domestic cultivation practices for seedling nursing and planting, diverse vegetable types and varying soil properties, fully automatic transplanters from other countries cannot be directly adapted for local planting requirements. Consequently, developing fully automatic transplanters tailored to China's specific conditions has become an essential objective. The seedling pickup mechanism is the key component that replaces manual seedling feeding with automated machine picking and placement, thus enabling the transition from semiautomatic to fully automatic transplanters[10]. It directly determines the success rate, efficiency and damage level during seedling pickup. Its design and optimization are therefore one of the core research topics in the field of automatic transplanting.

Therefore, this paper reviews the current development status of seedling pickup mechanisms for fully automatic vegetable plug seedling transplanters. Building upon this review, it further explores the seedling damage caused by various types of mechanisms, analyzing the causes of damage, existing detection methods, as well as future optimization strategies and development trends. This work aims to provide a reference for the future R&D of seedling pickup mechanisms and to contribute to the advancement of fully automatic transplanters.

2 Current state of research on seedling pickup mechanisms

The automatic seedling pickup mechanism is the core component of a fully automatic transplanter. In mainstream designs, it typically consists of a main actuating assembly and a seedling pickup end-effector. Regarding the end-effector design, the vast majority of current fully automatic transplanters adopt a pot-clamping end-effector, which uses needles inserted into the seedling root ball. This approach has also led to the development of the push-clamp combination type. Additionally, there are stem-gripping end-effectors that use clamping plates to grasp the seedling stems, as well as a few studies exploring alternative pickup strategies.

2.1 Pot-clamping seedling pickup mechanism

The pot-clamping mechanism is the most prevalent type, typically using grippers with two or four needles. During pickup, the needles of the gripper are inserted into the root ball of a plug seedling and then actuated to clamp it. Driven by various mechanisms such as pneumatic cylinders, linkages or gears, the pickup mechanism lifts the seedling from the plug tray and transports it along a predefined spatial trajectory to the planting position. Finally, the gripper releases, allowing the plug seedling to drop and complete the planting operation.

During this process, the insertion of needles inevitably causes some damage to the seedling root ball. The gripper can also damage the leaves, stems and roots of the plug seedling. When handling larger plug seedlings, the pickup needles can pierce and entangle the leaves, leading to release failures (hanging seedlings). However, this approach facilitates easy positioning and ensures a smooth motion trajectory, which is why it is adopted by most commercial fully automatic transplanters. Especially on seedling production lines, this solution is often used for culling and replanting to address issues of diseased, missing or weak seedlings in trays.

Large-scale commercial transplanters, particularly from European and North American manufacturers, primarily use integrated mechatronic and pneumatic systems. These machines are capable of picking up an entire row of seedlings simultaneously and are characterized by their high efficiency and large size. The RW series transplanter from Urbinati in Australia (Fig. 1(a)) uses a pneumatic four-needle gripping mechanism with up to 40 grippers per row, achieving a pickup rate as high as 40,000 seedlings per hour. However, it is designed exclusively for automated production lines in greenhouses and cannot be used for field transplanting[11]. The FlexPlanter culling and replanting robot from TTA company in the Netherlands (Fig. 1(b)), which integrates a vision system and a pot-clamping pick-and-place solution, can achieve a comprehensive efficiency of over ten thousand seedlings per hour, though it is also only suitable for greenhouse production line cultivation[12].

Japanese semiautomatic and fully automatic transplanters, suitable for small-scale farming, also frequently adopt the pot-clamping method, often in conjunction with special flexible plastic plug trays. For example, the SKP series fully automatic vegetable transplanter from Kubota can transplant about 0.1 ha·h^{-1}. It features a high degree of automation, minimal error and strong adaptability with adjustable wheel and planting row spacing. However, it mandates the use of proprietary plug trays specified by Kubota; failure to do so often results in inefficient pickup and improper planting. Also, the operation of the machine is complex, and it incurs high regular maintenance costs[13]. Additionally, riding-type vegetable transplanters from Yanmar are similar models[14].

Currently, China lacks stable commercial fully automatic transplanters, though numerous laboratory-level studies exist. Xie et al.[15] designed a linkage-driven, diagonal-insertion, pot-clamping pick-and-place device, optimizing the tray tilt angle and the parameters for gripper insertion. The release process is relatively simple: the gripper is spring-controlled, and the root ball is released and drops under gravity. Consequently, this design leads to positional errors at the drop point and is often accompanied by the disintegration of the root ball.

Ma et al.[16] designed and optimized a cam-linkage mechanism for automatically picking up tomato plug seedlings (Fig. 2(a)). The device is driven by a planetary gear train-linkage system

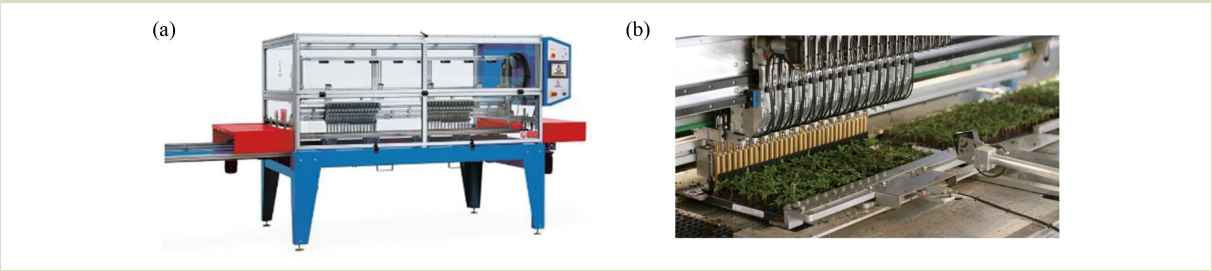

Fig. 1 (a) RW series transplanter from Urbinati (reproduced from Urbinati website[11], with permission from Urbinati S.r.l.); (b) FlexPlanter transplanter from TTA (reproduced from TTA-ISO website[12], with permission from TTA-ISO).

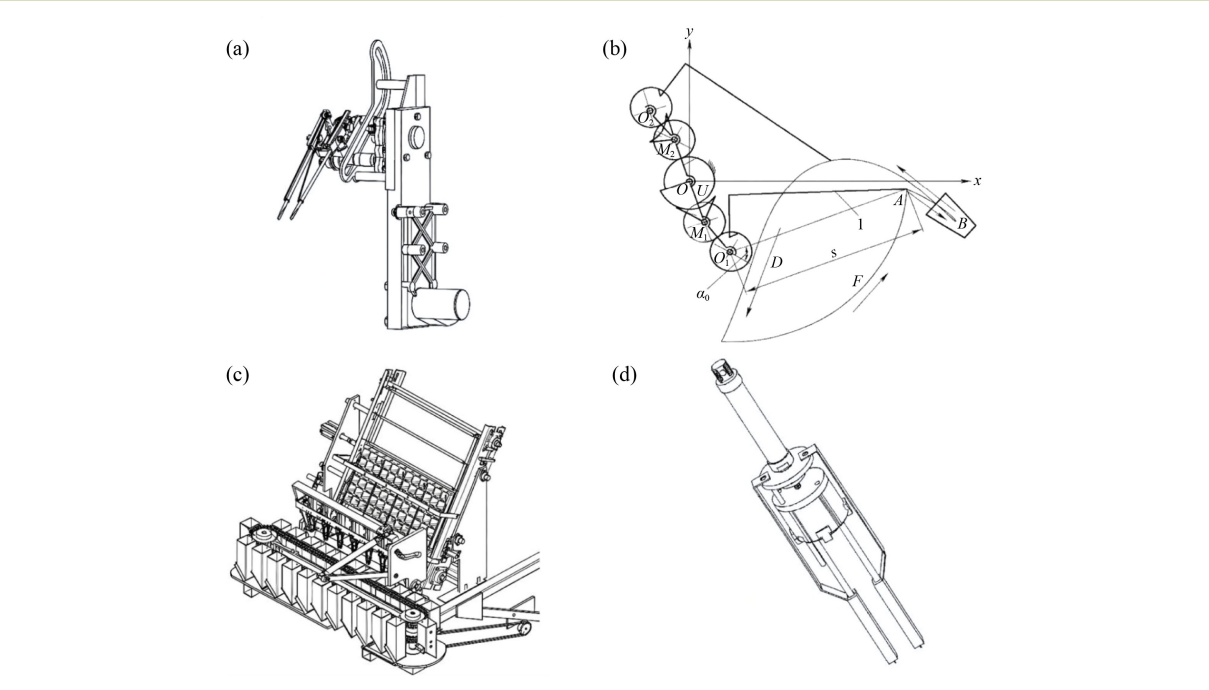

Fig. 2 (a) Cam-linkage seedling pickup mechanism (modified from Ma et al.[16], with permission from Transactions of the Chinese Society of Agricultural Engineering); (b) schematic of the planetary gear pickup mechanism (modified from Yu et al.[18], with permission from Transactions of the Chinese Society for Agricultural Machinery); (c) mechanism for whole-row pickup and variable-spacing placement (modified from Han et al.[20] under Creative Commons); and (d) pneumatic probe-type grippers (modified from Liao et al.[22], with permission from Transactions of the Chinese Society for Agricultural Machinery).

and an irregular slideway, with a cam-rocker mechanism controlling the opening and closing of the gripper needles. This design improved the success rate of low-speed pickup and placement and enhanced the operational stability of the machine. However, when using standard 128-cell plastic trays with small root balls and fragile seedlings, significant vibration and seedling ejection occurred during high-frequency operation.

Inspired by the principles of rice transplanters, Yu et al.[17] proposed a planetary gear pickup mechanism for vegetable plug seedlings based on a transmission combining elliptical and incomplete non-circular gears. However, the trajectory reference points were traced manually, resulting in path deviations. To correct this, Yu et al.[18] developed kinematic optimization software on a VB platform to refine the working trajectory (Fig. 2(b)). Building on this work, Zhou et al.[19] used a computer-aided interactive design method to create a non-circular complete gear planetary system with a large discharge angle. At rotational speeds of 40, 50 and 60 r·min^{-1}, the pickup success rates were 94%, 90% and 88%, respectively. However, due to the limited volume of the root balls, the mechanism was susceptible to seedling entanglement, leading to pickup failures.

To enhance the efficiency of seedling pickup and placement, Han et al.[20] designed a control system for simultaneous whole-row pickup and variable-spacing placement (Fig. 2(c)). This system allowed for the concurrent insertion and clamping of an entire row of seedlings, with the opening and closing of each gripper being independently controlled. Similarly, Zhao et al.[21] developed a flexible variable-pitch mechanism using pneumatic actuators and brake cables. This mechanism enabled variable-spacing placement for a whole-row pickup system and effectively reduced the impact and vibration generated by the pneumatic cylinders at high speeds. While both systems achieved a high success rate at low speeds, they experienced a decline in positioning accuracy, overall success

rate and gripping stability during high-speed operations. This was primarily attributed to an insufficient total cycle time for the pick-and-place actions.

Domestic research has also evaluated structural modifications to the pot-clamping gripper. Liao et al.[22] designed an embedded pneumatic pickup mechanism for rape paper-pot seedlings (Fig. 2(d)). In this design, the pickup needles were integrated into a stripping plate to facilitate seedling release and improve placement success. The paper pots used had significantly larger cell openings than standard plastic trays, which was intended to reduce root ball damage. However, this design adversely affected root system cohesion with the substrate, paradoxically leading to a decrease in the integrity of the picked root ball. Research featuring similar structural concepts includes the probe-type grippers developed by Yin et al.[23], Xin et al.[24] and Zhou et al.[25]. Their fundamental working principle is identical to that of standard grippers, with the primary modification being the replacement of the standard stripping ring with a wider stripping plate. This change effectively reduces release failures caused by substrate adhesion but fails to resolve failures arising from the entanglement of seedling stems and leaves.

2.2 Push-clamp combination type seedling pickup mechanism

Many fully automatic transplanters, particularly from Europe and North America, use a multi-stage pickup method. This approach builds upon the pot-clamping design by incorporating an ejection mechanism. This mechanism first pushes the seedling upward from the bottom of the tray cell, after which a gripper clamps the exposed root ball, either from the sides or by inserting needles. This method effectively reduces the required dislodging force, thereby lowering the necessary clamping force and mitigating the problem of root ball fracture under pressure. However, the ejection mechanism demands high positioning accuracy. Also, its small contact area with the root ball creates high stress, which can still cause damage. Additionally, due to the lack of standardization in currently available plug trays, the ejection mechanism may not be compatible with all tray types, leading to ejection failures and potential damage to the trays themselves. However, in Europe, North America, and elsewhere, this seedling picking solution has become one of the primary choices for commercial field transplanters.

The FUTURA fully automatic transplanter by Ferrari, Italy, for example, ejects seedlings from the tray cells across an entire row, after which plate-like grippers clamp the root balls from the sides[26]. Similar pickup methods are used by the automatic transplanter from Checchimagli in Italy and the PC-21 greenhouse transplanter developed by Flier Systems B.V. in the Netherlands[27,28].

Hu et al.[29] proposed a combined push-clamp-pull pickup technique (Fig. 3(a)). Using cucumber plug seedlings as test subjects, they conducted experiments on three different modes: push-then-clamp, push-while-clamping, and insert-then-push. They analyzed the relationships between parameters such as ejection speed, dislodging adhesion force and dislodging displacement. Ultimately, they identified the optimal parameter combination for the push-then-clamp mode, achieving a pickup success rate of 94.1%. However, since the study used a two-finger, four-needle gripper that inserts into the root ball, it still caused damage to the root system and the substrate. Zhang[30] proposed a push-clamp end-effector where a push rod first secures and ejects the plug seedling. A gripper then clamps the root ball from the sides, detaches from the push rod, and proceeds with targeted placement. This gripper design has a large contact area with the root ball, causing minimal deformation. However, the push rod can easily damage the bottom of the root ball, causing pitting, perforation or fracture.

To circumvent the damage caused by needle-insertion methods, Mao et al.[31] developed an automatic whole-row pickup device that first ejects plug seedlings using air nozzles and then grips them (Fig. 3(b)). The gripper clamps the exterior of the root ball, successfully addressing the issue of root ball fracture caused by needle insertion. However, to ensure a successful pickup, the required air pressure is significantly greater than the natural dislodging force for the seedling. This necessitates strict and well-defined design parameters for both the ejection pressure and the substrate moisture content.

2.3 Stem-gripping seedling pickup mechanism

To address the inevitable damage to the root ball and root system caused by pot-clamping mechanisms, researchers have evaluated the stem-gripping approach, which avoids the need to insert needles into the substrate (Fig. 4(a)). During pickup,

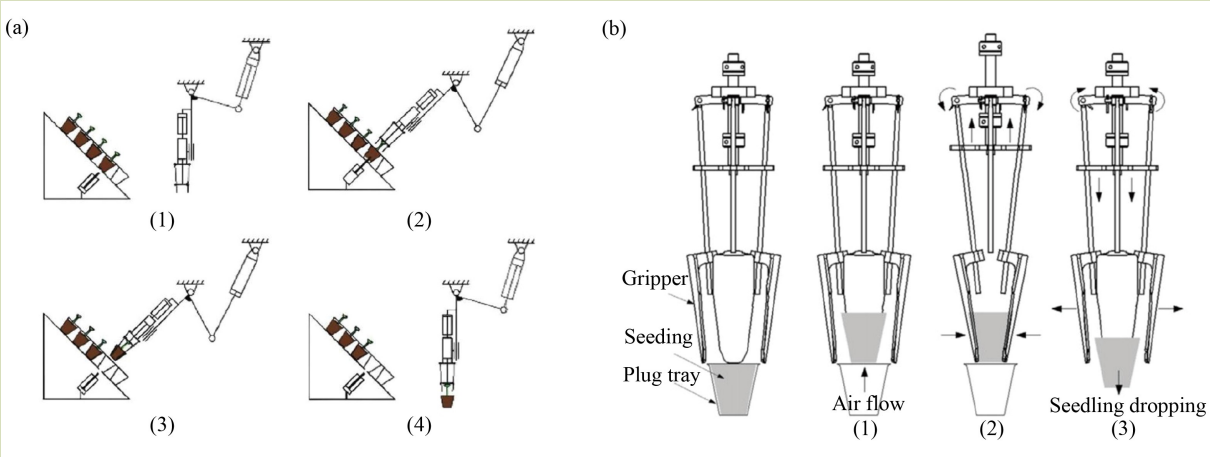

Fig. 3 Pickup process schematics for push-clamp combination mechanisms: (a) standard mechanical push-clamp mechanism (modified from Hu et al.[29], with permission from Transactions of the Chinese Society for Agricultural Machinery); and (b) air-assisted mechanical push-clamp mechanism (modified from Mao et al.[31] under Creative Commons).

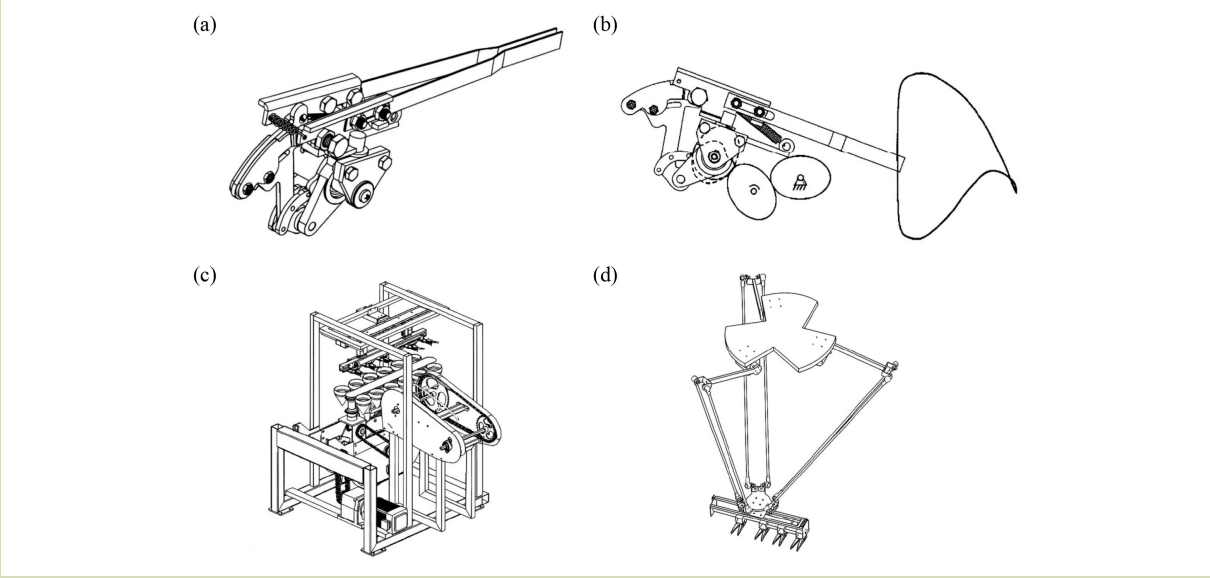

Fig. 4 (a) Schematic of a stem-gripping gripper (modified from Li et al.[34], with permission from Transactions of the Chinese Society of Agricultural Engineering); (b) transmission schematic of a non-circular gear mechanism (modified from Li et al.[34], with permission from Transactions of the Chinese Society of Agricultural Engineering); (c) structural schematic of a whole-row pickup mechanism (modified from Wang et al.[38], with permission from Transactions of the Chinese Society for Agricultural Machinery); and (d) delta robot-assisted pickup mechanism (modified from Hai et al.[40], with permission from Journal of Chinese Agricultural Mechanization).

the end-effector directly grasps the seedling stem to lift it from the plug tray before moving it to the placement point. This design significantly reduces damage to the root ball and root system. It also mitigates issues common with larger leafy seedlings, such as stem entanglement, leaf abrasion and the accidental extraction of multiple seedlings. However, it can cause compressive damage to the stem and is susceptible to positioning errors arising from non-uniform seedling posture.

A few international models use this technology, such as the PIC-O-MAT series of tray transplanters from Visser Horti Systems B.V. in the Netherlands, which can be fitted with V-shaped stem-gripping grippers but are used exclusively on nursery production lines[32]. The CuttingEdge from TTA company in the Netherlands, designed for automated sticking of rooted and unrooted cuttings, also uses a working principle similar to stem-gripping[33]. However, commercial transplanters extensively applying stem-gripping transplanting solutions in the field are still relatively uncommon.

Li et al.[34] proposed a stem-gripping mechanism for tomato seedlings based on a second-order elliptical gear planetary system and a cam-rocker mechanism, using a spring for gripper reset (Fig. 4(b)). In bench tests, it achieved a 92% success rate at a frequency of 80 plants/min. However, the system has specific agronomic requirements for the seedlings and experienced issues such as positional deviation, entanglement-induced mis-picks, and seedling slippage due to vibration. Chen et al.[35] proposed a five-bar, non-circular gear, stem-gripping mechanism for maize seedlings, which performed well at low speeds but resulted in cases of stem bending and lodging. Drawing inspiration from the application of non-circular gear transmissions in high-speed rice transplanting, Ren et al.[36] designed a stem-gripping mechanism with a non-circular gear planetary system that provides a smooth pickup trajectory, enabling intermittent operation with low-speed pickup and stable-speed placement.

Wei et al.[37] designed a stem-gripping automatic pickup mechanism combining a crank-slider and a slideway, but its average success rate was unsatisfactory. Following a developmental trajectory similar to that of pot-clamping mechanisms, subsequent research has focused on improving efficiency by adapting this type of mechanical principle into a whole-row pickup strategy. Wang et al.[38] designed an automatic whole-row stem-gripping device for vegetables (Fig. 4(c)), but it demanded fine-tuned agronomic parameters, such as seedling age and moisture content, and could not adapt to high-speed operation. Han et al.[39] designed an arc-shaped unfolding automatic pick-and-place device. It uses whole-row stem-gripping grippers to pick up seedlings, which then retract and unfold in an arc for placement. While the structure is compact and causes minimal damage to the root ball and leaves, the receiving mechanism struggled to maintain a constant speed during high-speed placement, leading to substrate collision and adhesion.

To improve positioning accuracy, Hai et al.[40] proposed a stem-gripping mechanism assisted by a Delta robot (Fig. 4(d)). This achieved a high success rate at low-to-medium speeds, but the speed was difficult to increase, and the rates of missed grips, gripping multiple seedlings and damage increased rapidly with speed.

2.4 Other seedling pickup mechanisms

In addition to these mainstream research areas, several other exploratory approaches have been investigated in both industry and academia, such as push-drop, air-blast, suction-based and vibration-based methods.

The agricultural robot from the American company Iron Ox uses a compliant enveloping gripper, mounted on the end-effector of its robotic arm, specifically for handling substrate blocks[41]. This gripper operates by applying lateral pressure to grasp the blocks, enabling automated processes within a greenhouse production pipeline. The system is integrated with plant growth monitoring, comprehensive sensor suites and a hydroponic system. While highly automated, this approach is characterized by its high capital cost and significant energy consumption.

Zhang et al.[42] designed a transplanting component that combined a crank-slideway linkage ejection mechanism with a gravity-regulated seedling drop mechanism. An ejector rod pushes the plug seedling out directly onto a guiding plate, from which the seedling falls by gravity into a receiving box. This design was primarily based on simulations and lacked experimental validation. Also, without a mechanism to grip or receive the seedling at close range, the root ball was prone to shattering upon impact.

Yuan et al.[43] designed a combined air-blast and vibration pickup mechanism for vegetable transplanters, intended for use with bottomless hollow-cell trays and nursery bags. Vibration is used to loosen the nursery bags, and an air-blast device then blows the seedlings into a drop tube. This method has low efficiency, and both the vibration and the air blast pose a risk of damaging the substrate.

Wang et al.[44] designed a pneumatic downward-pressing high-speed pickup device for use with special bottomless modular plug trays. It operates by pressing the seedling directly downward to dislodge it from the tray. Although the pickup

speed is high, the compression and subsequent fall result in an extremely high rate of root ball fracture and a risk of compressive damage to the root system.

Yao et al.[45] designed a combined gripping and vibration pickup mechanism for vegetable transplanters. A vibration device loosens the seedling, and a gripping mechanism then uses flexible steel wire ropes to clamp the stem for pickup. This approach relies on continuous vibration, which creates a high risk of damaging the root ball, and it also lacks experimental validation.

Also, the advancement of modern sensors and intelligent control systems has had a pervasive impact on the field of transplanting. Seedling transplant nursery line systems, such as the RW series transplanter from Urbinati (Australia) and the seedling culling and sorting robots from TTA (Netherlands), use vision systems to identify and remove diseased or weak seedlings. In academic research, efforts have also been made to develop force-feedback grippers. For example, Li et al.[46] developed a force-feedback seedling gripper based on a linear Hall element, capable of high-precision pepper transplanting, but its validation has been limited to laboratory experiments. While persistent efforts are being made to integrate vision recognition into field-operating machines, the adoption of comprehensive vision systems in commercial field transplanters remains limited due to constraints related to cost, operational efficiency and challenging in-field conditions.

Table 1 provides a comparative summary of various seedling pickup mechanisms, detailing their respective advantages, disadvantages, application scopes and damage rates.

3 Existing problems in seedling pickup mechanisms

A comprehensive analysis of domestic and international research reveals a clear landscape. Highly automated and efficient large-scale transplanters from Europe and North America have found widespread application in the large, open fields typical of those regions. Similarly, the efficient yet complex small-scale transplanters from Japan are well-adapted to the smaller scale, more intensive agriculture. In China, while semiautomatic transplanters improve efficiency compared to purely manual methods, they tend to reduce the physical strain on operators but do not significantly reduce the overall labor requirement. Also, the fully automatic transplanters currently under development in China have seen limited promotion and lack widespread practical application. They are not yet fully adapted to the diverse field conditions and agronomic requirements across the country, and they still exhibit deficiencies in accuracy and stability. Also, the unavoidable problem of seedling damage remains a significant and persistent challenge in the development of transplanting technology.

3.1 Issues with accuracy

3.1.1 Issues with gripper positioning accuracy

During transplanting, pickup mechanisms are designed for either single-gripper sequential pickup or multi-gripper whole-row pickup, depending on the desired efficiency. However, due to the constraints of standard tray dimensions and the minimal spacing between seedlings, it is impossible to pick up all seedlings in a tray simultaneously. Consequently, all designs require a transverse feed to access seedlings within the same row and a longitudinal feed to switch between rows. While the initial positioning of the tray is generally accurate, even minor errors in the positioning of the gripper can accumulate over successive feed cycles. When this cumulative error becomes significant, it can lead to a situation where the gripper strikes the tray itself, causing a pickup failure[47].

Additionally, designs that use the push-clamp combination method require an additional seedling ejection step. Any error in the positioning of the ejector rod can prevent the seedling from being properly dislodged from its cell, thereby preventing the gripper from executing the subsequent pickup action and resulting in a complete pickup failure.

3.1.2 Issues with seedling pickup accuracy

Domestic research on transplanters predominantly focuses on the pot-clamping method, where needles are inserted into the root ball from above or from the side. However, because the position and posture of seedlings within the cells are often not uniform, the seedling stem may not be perfectly centered in the root ball, which can easily lead to pickup deviation[48]. This is often accompanied by problems such as the needles piercing leaves or seedlings becoming entangled with the gripper. This results in suboptimal force application. Consequently, pickup failures or seedling slippage after being gripped are common occurrences. To mitigate these issues, many related studies

Table 1 Evaluation of different seedling pickup mechanisms

Mechanism type	Applicable crop characteristic	Typical crop	Typical operational speed range (plants min^{-1})	Typical overall success rate	Typical damage rate	Advantage	Disadvantage	Source
Pot-clamping seedling pickup mechanism	Crops with well-developed root systems and firm, cohesive root balls	Certain solanaceous and leafy vegetables	60–110	87.4%–94.4%	3.13%–4.17%	Simple structure, low cost, mature technology, wide application scope, abundant real-world case studies	Low pickup accuracy; unstable grip; susceptible to vibration; high risk of damage to root balls, root systems, stems, and leaves	[15–25]
Push-clamp combination type seedling pickup mechanism	Crops with well-developed root systems and firm root balls, especially when a high dislodging force is needed	Certain solanaceous vegetables, leafy vegetables, and rice blanket seedlings	100–120	91.0%–94.8%	1.80%–5.88%	Higher success rate; less stringent requirements for root ball firmness; reduces the required extraction force	Complex mechanical structure; requires high positional accuracy; high risk of damage to root balls and root systems; potential risk of damaging the plug tray	[29–31]
Stem-gripping seedling pickup mechanism	Crops with less developed root systems, loose root balls, but strong, durable stems	Certain solanaceous vegetables	60–90	86.7%–95.0%	1.85%–4.96%	Simple structure; minimal requirements for root ball integrity; low damage to root balls and root systems	Requires very high stem strength; high risk of stem compression/ fracture and root tearing; narrow application scope	[34–40]
Various experimental designs	Highly specific characteristics (e.g., firm root balls, light weight)	Highly crop-specific	Variable, 120–270	Variable, 56.9%–77.5%	No conclusive data available	High potential for damage reduction; can be tailored to specific crops and applications	Technologically immature; low reliability; poor general applicability; high cost	[42–46]

Note: Values represent ranges or typical values extracted from representative studies; metrics are not directly comparable across all papers due to different test conditions and definitions.

impose strict requirements on seedling quality and nursery practices.

3.1.3 Issues with seedling placement accuracy

In most domestic transplanter research, the trajectory involves the gripper moving above the planting mechanism and releasing the seedling, allowing it to fall into the delivery channel by gravity. This approach simplifies mechanism positioning. However, inaccuracies during the initial pickup phase can result in a seedling with a tilted posture or a loose or fractured root ball. During placement, this leads to a shift in the center of gravity of the seedling, which can cause inaccurate placement or poor verticality after planting[49]. Also, the aforementioned entanglement issue can prevent the seedling from being released properly, leading to a placement failure. Additionally, at higher operating speeds, increased mechanical vibration can cause the seedling to be dislodged from the gripper at an inopportune moment, preventing it from completing the placement process correctly.

3.2 Adaptability issues

3.2.1 Adaptability issues arising from agronomic diversity

Regarding nursery materials, standardized hard plastic plug trays are the mainstream choice in China. They are available in numerous specifications, offering a wide range of choices, and are favored for being lightweight, durable, easy to transport and reusable. However, adapting a transplanter mechanism and control programs to handle these various tray specifications can require significant adjustments. The size of

the individual cells also dictates the required dimensions of the pickup gripper. Also, some transplanting solutions use alternative materials like flexible trays or paper pots, which impose different structural requirements on the pickup mechanism[50].

At the same time, variations in nursery management practices make it difficult to achieve standardized seedlings[51]. Differences in seedling size and posture, and the robustness of their stems and root systems create a diverse set of demands on the design and dimensions of the pickup mechanism. Consequently, transplanting mechanisms with a fixed structure or single size face significant adaptability challenges when confronted with this agronomic diversity.

3.2.2 Adaptability issues arising from topographical diversity

China's vast territory encompasses diverse climates and complex topographies. This includes large, flat fields in plain regions that are ideal for large-scale agricultural machinery; fragmented, terraced fields in hilly regions that require operation on sloped terrain; and fields with adverse soil conditions, such as saline-alkali or sandy soils[52]. These different topographies, soil types and climates necessitate vastly different planting methods and cultivation systems. As a result, the operational environment and optimal efficiency of transplanters vary significantly, creating a major adaptability challenge for the machinery.

3.2.3 Applicability to different crop cultivars

Transplanters must handle a wide variety of seedling types, each with unique root, stem and leaf characteristics, as well as distinct agronomic requirements, making a universal mechanism difficult to achieve[53]. For example, the seedlings of cabbage and other brassicas have relatively small leaves and lack robust stems, making them unsuitable for stem-gripping methods. However, as taproot vegetables, their root balls often lack compactness, creating an urgent need for optimized pot-clamping solutions or corresponding nursery management protocols.

In contrast, vegetables like tomatoes and cucumbers have fibrous root systems that form highly compact root balls, making them well-suited for the pot-clamping method. However, unlike cabbage, their seedlings have brittle, soft stems and often larger leaves, which makes them prone to entanglement and release failures, thus presenting a different set of challenges. Also, specialized crops like strawberries, whose transplanter development often builds upon vegetable transplanter research, have unique requirements for planting orientation that standard mechanisms cannot meet[54]. These examples are by no means exhaustive. Therefore, the adaptability of transplanters is severely challenged by the diverse range of target crops.

3.3 Seedling damage issues

3.3.1 Damage from pot-clamping mechanisms

In the pot-clamping method, pickup needles are inserted into the seedling root ball. Due to non-uniform seedling position and posture, this action inevitably causes damage, such as piercing leaves or abrading stems. When handling seedlings with well-developed or dense root systems, it can easily lead to root abrasion, compression, and fracture, resulting in poor growth or even death after transplanting. Conversely, for seedlings with poorly developed root systems and loose root balls, this method can cause the root ball to crack and lose substrate. This not only makes the seedling difficult to pick up but can also lead to the complete disintegration of the root ball during placement, preventing it from standing upright and resulting in transplant failure (Fig. 5(a–c))[55].

3.3.2 Damage from push-clamp combination mechanisms

The push-clamp combination method adds an ejection step to the pot-clamping process. When an ejector pin is used, its insertion into the root ball means the seedling is subjected to multiple stress events, increasing the probability of fracture. The risk of root damage is also exacerbated (Fig. 5(d)). Also, the ejection process demands high positional accuracy from the mechanism. A failed ejection attempt can damage the plug tray, causing collateral damage to the seedling[56].

3.3.3 Damage from stem-gripping mechanisms

In the stem-gripping method, the primary stress is applied to the stem of the seedling. If the gripping force is insufficient, the seedling may fail to overcome the dislodging force from the tray or may slip from the gripper after pickup. If the force is excessive, it can cause stem compression or fracture, leading to a long recovery period and poor growth after transplanting (Fig. 5(e)). Additionally, if the seedling root system is poorly

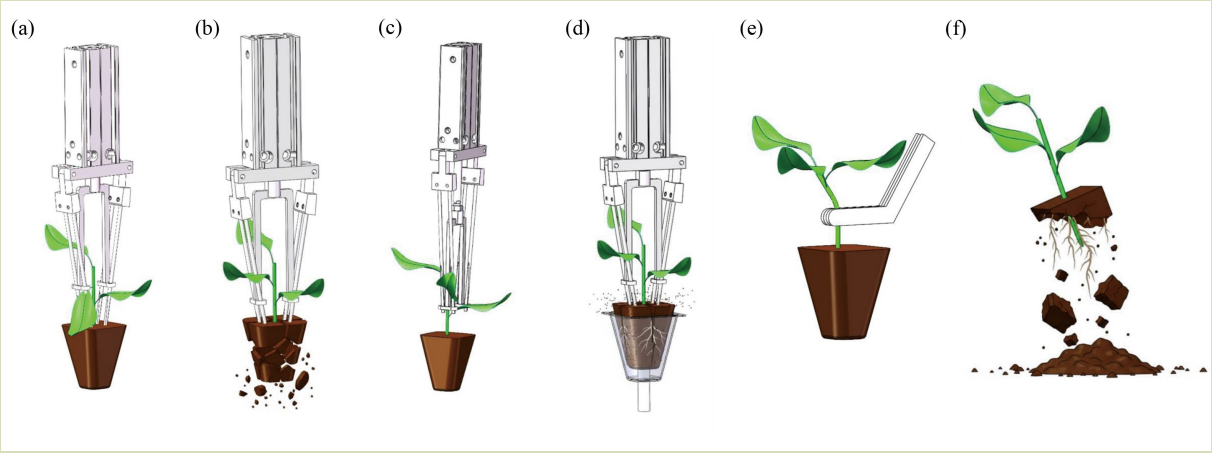

Fig. 5 (a) Pot-clamping damage, pierced leaf; (b) pot-clamping damage, fractured root ball; (c) pot-clamping damage, root abrasion; (d) ejection damage, root ball injury; (e) stem-gripping damage, stem compression; and (f) placement damage, impact shatter.

developed, the root ball may not be extracted intact, resulting in severe root tearing[57].

3.3.4 Damage during seedling placement

Most systems rely on gravity acting on the root ball to self-orient the seedling during the drop. A short drop height often results in improper orientation, while a long drop height can cause severe impact damage. In either case, the final verticality of the seedling cannot be guaranteed (Fig. 5(f)). However, placement-related damage can often be mitigated through the structural optimization of the planting mechanism[58].

An overview of common seedling pickup failure modes, their underlying causes, and corresponding recommendations for mechanical structural optimization to mitigate seedling damage is presented in Table 2.

4 Current state of research on transplanting damage

4.1 Evaluation of transplanting quality

The quality of transplanting is primarily evaluated based on long-term post-transplanting growth, a metric that is influenced by numerous non-transplanting factors and thus lacks absolute objectivity. Currently, the main criterion for assessing the operational quality of a fully automatic transplanter is the transplanting success rate, defined as the proportion of seedlings that resume normal growth within a short period after being transplanted. A review of various transplanter studies shows that the standards for calculating this success rate typically include indicators such as planting depth, seedling omission rate, post-planting verticality and the in-process seedling damage rate. For studies with a longer observation period, statistical metrics like the duration of the transplant recovery period, subsequent survival rate, leaf count, internode length, stem diameter, leaf area and flowering/fruiting status are also included.

Among these indicators, planting depth consistency and verticality are primarily influenced by the planting mechanism. These factors are important for ensuring stable individual seedling growth, adequate water and nutrient supply, preventing lodging and stem curvature and facilitating subsequent field management. They are largely independent of the structure and method of the pickup mechanism.

In contrast, the in-process seedling damage, as discussed previously, is mainly caused by the pickup method. Damage to the roots, stems and leaves can lead to a prolonged recovery period, insufficient water and nutrient uptake, increased susceptibility to pests and diseases, and even post-transplanting mortality. Also, excessive damage during pickup can cause the post-planting performance metrics the seeding to fall below required standards.

Table 2 Summary of pickup failures, causes and design recommendations

Failure mode	Cause of failure	Resulting damage and mechanism	Primary mechanism affected	Optimization recommendation
Gripper positioning failure	Cumulative positioning error	Gripper misalignment leads to tray damage, missed pickups, and injury to the root ball, stem or leaves	All types	Optimize the positioning system; improve the accuracy of sensors and mechanical components
Failure to insert into root ball	Seedling is off-center in the cell; stem/leaf entanglement causes interference	Needles pierce or abrade the stem and leaves	Primarily pot-clamping and push-clamp combination	Standardize seedling production (e.g., control age/size); implement vision-based recognition for precise targeting
Failure to grasp seedling stem	Stem is off-center in the cell; cumulative positioning error	Missed pickup; gripper scratches or compresses the stem and leaves	Primarily stem-gripping	Standardize seedling production; optimize gripper structural design; implement vision-based recognition
Extraction failure	Improper force application by gripper or push-pin	Insufficient gripping/pushing force; excessive pushing force damages the root ball, making it difficult to grasp; excessive root growth through the tray increases resistance	All types	Optimize force analysis; add a force control system; improve nursery practices
Seedling slippage during pickup	Loss of substrate integrity prevents a secure grip	Poor root cohesion leads to root ball disintegration; needles are too thick or gripping force is excessive, causing root ball fracture	Primarily pot-clamping and push-clamp combination	Optimize for low-damage design or switch to an alternative pickup mechanism
Seedling dropped during transfer	Abrupt stops and vibration during transfer	Dropping can cause the root ball to shatter on impact	All types	Add or optimize vibration damping systems
Inaccurate placement failure	Improper drop height or unsuitable release posture	Excessive drop height shatters the root ball; insufficient drop height or poor posture prevents proper orientation, leading to loss of verticality	All types	Adjust to an appropriate drop height; design a cushioned or controlled-release placement mechanism

4.2 Agronomic and biomechanical approaches to transplanting damage

Fully automatic transplanters currently face numerous challenges, including the mismatch between machinery and agronomy, low pickup efficiency and a high propensity for causing seedling damage. Most domestic research in China is still at the prototype or laboratory stage, with few practical applications. To address these universal problems and mitigate transplanting damage, both domestic and international studies have focused on optimizing seedling quality and nursery practices to determine ideal cultivation parameters. Building upon this, further research has been conducted on the damage caused by pick-and-place mechanisms.

Currently, most domestic research uses the biological characteristics (including physical parameters, vigor index and root robustness) and mechanical properties of seedlings as the basis for determining their damage thresholds. The seedling vigor index is typically calculated from physical parameters such as plant height, stem diameter, leaf count, leaf area, root volume and organ weight. The mechanical properties are determined through tensile and compression tests[59,60].

Hu et al.[61] calculated a vigor index for rape seedlings based on stem diameter, plant height, and the dry matter mass of roots and shoots, providing a quantitative indicator of seedling quality. Gong et al.[62] statistically analyzed tomato seedling metrics and used a fuzzy comprehensive evaluation method to establish a composite quality index. Based on this, they calculated a vigor index using total chlorophyll, plant height and whole-plant dry mass to provide a reference for grading tomato seedling quality.

Regarding mechanical properties, Hu et al.[63] conducted tensile, bending, and compression tests on the stems of pepper seedlings at the transplantable stage to determine their tensile strength, bending stress and compressive strength ranges. Zhao et al.[64] performed tensile tests on the stems of pepper seedlings at different growth stages and conducted clamping force tests simulating a pickup mechanism. They also designed

a three-factor, three-level orthogonal experiment for seedling extraction, considering seedling age, substrate moisture content and substrate composition. Han et al.[65] experimentally studied the drop characteristics of pepper seedlings, observing the impact on the root ball and stem. Han et al.[66] used a texture analyzer to compress cucumber seedling root balls, studying the relationship between compression amount and compressive force. Ma et al.[67] used modern electronic measurement technology to study the pulling force of factory-produced plug seedlings, establishing a relationship between the required pulling force and the number of seedlings per cell.

Also, root system robustness is a critical indicator of seedling quality, and damage to the root ball and root system is the most common and severe problem for the mainstream pot-clamping mechanisms. Since the roots are completely enveloped by the substrate, direct visual assessment is difficult. Current excavation methods are labor-intensive and cause extreme damage[68]. Common observation methods, such as root washing, are typically destructive. Although simple, washing away the substrate damages the root system and fails to preserve its original morphology[69]. Consequently, researchers have adopted alternative methods for root observation, such as using transparent substrates, scanning imagery and 3D modeling. Fang et al.[70] used agar as a transparent medium for easy observation and used laser scanning to capture root growth status, although this method is crop-specific. Luo et al.[71] introduced multislice spiral CT imaging to root system research, achieving accurate and non-destructive results, though image quality required further optimization. Wang et al.[72] used a semihydroponic phenotyping platform to evaluate the root morphological traits of barley under different growing conditions (Fig. 6(a)). Kumi et al.[73] used Micro-CT to analyze the physical, mechanical and agronomic properties of the substrate-root system of tomato plug seedlings. They compared these findings with data from destructive methods and established a model capable of simulating root growth and the forces acting on the root system. Han et al.[74] used Micro-CT to inspect the root balls of plug seedlings while being clamped, performing 3D reconstructions of the root system and pore spaces (Fig. 6(b)). This allowed for clear observation of main root displacement and its envelopment of the substrate. They identified the structural characteristics of tomato seedling root systems and the mechanism of pressure-induced crack formation in the root ball. Based on these findings, they determined the optimal gripper needle dimensions, contraction amount and gripping angle for a pot-clamping mechanism to minimize root ball damage.

The further development of automatic seedling pickup technology relies on a foundation of agronomic matching. Therefore, evaluation metrics for seedling vigor and mechanical properties must integrate a broader range of factors to improve the operational efficiency of transplanters, reduce transplanting damage and develop more practical design solutions.

Table 3 synthesizes findings from biomechanics research, detailing the evaluation criteria for key parameters and their implications for mechanical design and optimization.

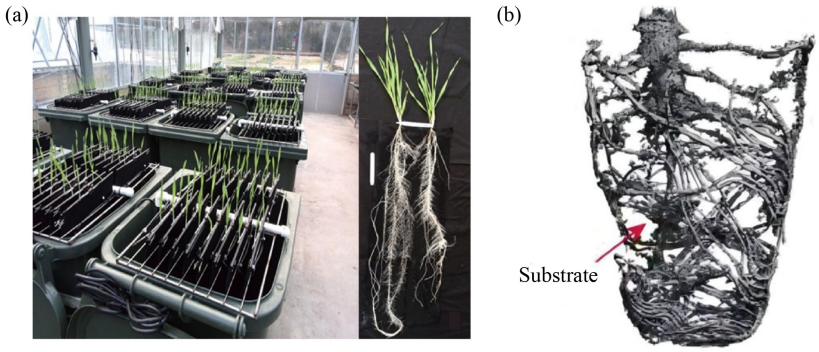

Fig. 6 (a) Semi-hydroponic phenotyping platform for barley root observation (modified from Wang et al.[72] under Creative Commons); and (b) 3D reconstruction of a substrate-root system using Micro-CT imaging (modified from Han et al.[74] under Creative Commons).

Table 3 Influence of key agronomic parameters on the design of pickup mechanisms

Agronomic parameter	Parameter description	Key design considerations	Principle of influence
Root ball integrity	Capacity of the root ball to maintain its structural integrity against external forces	Selection of gripper type (e.g., pot-clamping); gripper structure (e.g., needle design)	Cohesiveness of the root ball determines the upper limit of the gripper clamping force
Substrate moisture content	Percentage of water within the root ball, which affects its weight, cohesiveness, and friction coefficient	Material of the gripper contact surfaces; gripper structure	Substrate weight and the required extraction force determine the lower limit of the gripper clamping force
Plug tray geometry	Geometric data of the tray cells, including shape, size, depth, taper and spacing	Dimensions and structure of the gripper (including the selection of a push-out mechanism)	Cell taper angle affects the contact area and the range of the required extraction force
Stem strength	Ability of the seedling stem to withstand external forces such as compression, bending and tension	Selection of gripper type (e.g., stem-gripping); gripper structure (e.g., contact surface design)	Compressive strength of the stem determines the upper limit of the gripper clamping force
Seedling morphology	Plant height, canopy width, cotyledon position, and the number and size of true leaves	Gripper dimensions and its reachable workspace	Seedling morphology can create obstructions for the gripper motion trajectory

4.3 Post-transplanting damage detection methods

After transplanting, seedlings undergo a recovery period before resuming continuous growth and development. The ability to successfully recover is the core biological indicator for evaluating the transplanting operation. This transplant recovery period typically lasts about a week and requires appropriate management of temperature, humidity, light, water and fertilizers. Successful completion of this period is generally considered a successful transplant, but this evaluation is largely experience-based, and international research currently lacks a numerical standard for defining successful recovery. Consequently, some severely damaged seedlings fail to recover, while others may survive the initial period but exhibit poor subsequent growth, succumbing to pests or diseases, or experiencing stunted growth.

A common and straightforward method is to monitor the phenotypic data of the seedlings post-transplanting[75]. In addition to the physical parameters mentioned earlier, this includes measuring tiller number, flowering time, the number and size of inflorescences, fruiting period, and final yield. However, this approach has a long experimental cycle, provides little immediate feedback and is susceptible to significant error due to the influence of in-season management practices. Zhang et al.[76] used the oven-drying method to measure dry matter accumulation and calculate light energy use efficiency, which indirectly reflected the post-transplanting growth status of rape seedlings and demonstrated a significant positive correlation between transplanting time and final effect. However, this is a destructive test. Wang et al.[77] measured chlorophyll content from leaf extracts and root oxidative activity using the α-naphthylamine oxidation method, both of which are destructive. The use of a photosynthesis meter to measure photosynthetic parameters, however, can effectively reflect plant health non-destructively. Research on post-transplanting damage detection is relatively limited but is needed to provide direct feedback on the practical effectiveness of automatic pickup technology and serves as a basis for further research. Therefore, it should not be overlooked.

The evaluation criteria for various types of damage, along with the corresponding experimental methods for their detection, are summarized in Table 4.

5 Recommendations for future development

5.1 Pursuing high-speed, high-accuracy and low-damage operation

The fully automatic transplanting industry in other countries is relatively mature. Large-scale transplanters for field operations, such as the FUTURA model from Italy, can achieve operational efficiencies of 7000–9000 plants h^{-1}[26]. In controlled environments, such as nursery production lines, the Australian RW series can reach a pickup rate of 40,000 seedlings h^{-1}[11]. In contrast, most transplanter mechanisms developed in Chinese

Table 4 Methodologies for assessing mechanical damage in seedlings during transplanting

Damage category	Primary mechanism affected	Evaluation metrics	Common test method	Deficiencies of test method	Recommendations for test optimization
Root ball fracture and root damage during insertion	Primarily pot-clamping and push-clamp combination	Root ball integrity rate or substrate loss rate	Simulated pickup test with gravimetric analysis	Test conditions are overly idealized, ignoring machine speed and vibration	Introduce dynamic test conditions
Root ball shatter on impact	All types	Compressive strength of root ball	Static compression test	Fails to reflect dynamic impact effects	Add dynamic mechanical testing
		Substrate loss rate and post-transplant verticality	Seedling drop test	Ignores horizontal initial velocity and actual field soil conditions	Incorporate initial velocity into the drop mechanism; simulate field soil surface
Leaf/stem abrasion or piercing damage	Primarily pot-clamping and push-clamp combination	Leaf damage rate and damaged area	Simulated pickup test	Test conditions are overly idealized, ignoring machine speed and vibration	Introduce dynamic test conditions
Stem damage from gripping/compression	Primarily stem-gripping	Stem damage rate	Simulated stem-gripping test	Test conditions are overly idealized, ignoring machine speed and vibration	Introduce dynamic test conditions
		Compressive and bending strength of the stem	Stem three-point bending and compression tests	Ignores the constraining effects of the root system and root ball	Introduce composite constraints; test intact seedlings

laboratories operate at a much lower efficiency, typically between 60 and 90 plants min^{-1}. When attempts are made to increase the speed to 120 plants min^{-1}, they often encounter severe vibration, a sharp decline in accuracy and increased pick-and-place failures, making it difficult to maintain efficient and stable operation. Critically, this vibration and low accuracy are also major contributors to the seedling damage caused by these mechanisms.

Therefore, future research on automatic transplanting technology in China must focus on achieving a combination of high speed, high accuracy and low damage. While the currently popular whole-row pickup approach has effectively increased pickup efficiency, it still struggles with stable and accurate placement. Further optimization is needed in vibration reduction and stabilization for high-speed, short-duration placement[78]. Simultaneously, the pickup methods themselves require optimization. To avoid the root and root ball damage inherent in the pot-clamping method, researchers have evaluated the push-clamp combination and stem-gripping methods. Both offer certain advantages but also introduce new types of damage and face challenges in ensuring both accuracy and efficiency[79]. Although Table 2 provides detailed recommendations for further mechanical structural optimization to mitigate pickup damage, future research should continue to draw upon mature international case studies while considering domestic application scenarios. This involves selecting low-damage pickup methods, optimizing the mechanical structure of the pickup mechanism, enhancing operational efficiency, and ensuring smooth and stable mechanical motion, while maintaining a transplanting success rate exceeding 90%. The ultimate goal is to develop an integrated solution for fully automatic transplanters that is simultaneously high-speed, accurate, and stable.

5.2 Enhancing intelligence and automation

Automatic pick-and-place mechanisms used in Chinese research often suffer from issues like positioning inaccuracies, cumulative errors, unstable force application and improper gripping locations. These problems can be addressed by incorporating sensors and advanced control algorithms to improve the positioning accuracy of the tray and the gripper, as well as to precisely regulate the application force and location. The integration of machine vision and monitoring systems can handle special cases, such as adjusting the pickup orientation for skewed seedlings, identifying seedling direction during transplanting, and recognizing seedling health for culling and supplementing on a production line[80–84]. While these measures can significantly enhance the intelligence of individual system components, they also greatly increase overall system complexity. Therefore, it is important to balance the pursuit of advanced intelligence with practical application needs.

Given the current low level of intelligence and high reliance on

manual labor in domestic transplanters, a more comprehensive adoption of intelligent control systems is necessary. The various parts of the system must be designed to work adaptively with each other, rather than being a simple assembly of independent components[85,86]. This requires increasing the overall level of electrification and establishing a complete, integrated control system for the entire machine. Also, agronomic requirements must be considered to improve the synergy between the machine and the cultivation practices. At the same time, the operating system should be simplified and the human-computer interaction design optimized to lower the technical barrier and learning costs for agricultural operators.

5.3 Optimizing agronomic practices

While efforts are made to enhance the intelligence of transplanters and optimize their mechanical designs to meet agronomic needs, the agronomic management system must also undergo corresponding adaptive optimization. The choice of seedling cultivars and nursery management practices should take the transplanter mechanics into account. For example, focusing on cultivating seedlings with dense, well-developed root systems that form a compact root ball can significantly improve the success rate of pot-clamping mechanisms. Similarly, enhancing the mechanical strength of seedling stems can make them better suited for stem-gripping methods. Pretransplant management, such as controlling the moisture content of the root ball and adjusting the composition of the growing substrate, can also greatly benefit transplanter performance.

5.4 Promoting versatility, standardization and high adaptability

Currently, most transplanter research in China remains at the prototype stage, lacking extensive field testing and long-term, high-intensity practical use. Compounding this issue is China's vast and diverse geography, complex topography, varied climates, and wide range of vegetable crops. This has led to a situation where transplanter designs are often overly complex, highly crop-specific and structurally unique. The lack of interchangeable parts and compatible control systems results in a proliferation of machine types, high prototype costs and difficulties in maintenance and repair. Therefore, improving the versatility of transplanters is an essential step in moving the research from the laboratory to practical application.

Achieving versatility in pickup mechanisms first requires the standardization of component design and selection to ensure simplicity, ease of maintenance and interchangeability. Secondly, it necessitates uniformity in the operational targets, which means using standard consumables like uniform-sized plug trays to ensure consistent positioning, and adopting standardized nursery practices to produce seedlings of a consistent quality. Additionally, versatility can be enhanced by designing mechanisms that can handle different crop cultivars by simply replacing a few components or adjusting control parameters. Finally, incorporating features like interchangeable mobile parts and leveling functions will allow adaptation to different terrains. The ultimate aim is for Chinese transplanter research to achieve versatility, standardization and high adaptability, thereby realizing the goals of low cost and high reliability.

6 Conclusions

In developed economies, such as in Europe and the USA, research into transplanters began early, leading to the formation of a mature, large-scale industry for fully automatic transplanters and their widespread, long-term application across various agricultural contexts. In contrast, China still lacks a commercialized and readily applicable fully automatic transplanter industry. Research remains predominantly at the prototype stage, with a significant gap still to be bridged before widespread promotion and practical application can be realized.

For the advancement of fully automatic transplanters, research on their core component (the automatic seedling pickup mechanism) is of paramount importance. Current domestic research is primarily centered on the pot-clamping mechanism, with a secondary focus on the push-clamp combination and stem-gripping types. Although extensive research has been undertaken, significant deficiencies remain in terms of operational efficiency and stability.

As research and development in automatic pickup technology progress in China, the future trajectory points towards the integration of sensor systems, machine vision technology and comprehensive machine control systems. This will establish a domestic industry of fully automatic transplanters characterized by high speed, accuracy, low damage, intelligence

and versatility. This new generation of transplanters will be adapted to China's specific agronomic practices and diverse topographies, propelling the further advancement of fully automated agricultural production in the nation.

Acknowledgements

AI was not used for any creative content generation for this paper. During the preparation of this paper the authors used ChatGPT (OpenAI, GPT-4o) in order to improve language. After using this tool, the authors reviewed and edited the content as needed and take full responsibility for the content of the publication. This work was funded by the Jiangsu Agricultural Science and Technology Innovation Fund, grant number CX(24)3031; the Natural Science Foundation of the Jiangsu Higher Education Institutions of China, grant number 24KJA210001; the Key Laboratory Fund of School of Agricultural Engineering, Jiangsu University, grant number MAET202319; and the Postgraduate Research & Practice Innovation Program of Jiangsu Province, grant number KYCX24_3988.

Compliance with ethics guidelines

Ruoyu Zhang, Qizhi Yang, Lei Liu, Qingyu Wu, Zhengliang Li, and Addy Min declare that they have no conflicts of interest or financial conflicts to disclose. This article does not contain any studies with human or animal subjects performed by any of the authors.

REFERENCES

1. Food and Agriculture Organization of the United Nations (FAO). FAOSTAT Statistical Database. *FAOSTAT*, 2025. Available at FAO website on September 5, 2025
2. Han L H, Mao H P, Kumi F, Hu J P. Development of a multi-task robotic transplanting workcell for greenhouse seedlings. *Applied Engineering in Agriculture*, 2018, **34**(2): 335–342
3. Cheng B, Wu H R, Zhu H J, Liang J, Miao Y S, Cui Y L, Song W T. Current status and analysis of key technologies in automatic transplanters for vegetables in China. *Agriculture*, 2024, **14**(12): 2168
4. Han L H, Kumi F, Mao H P, Hu J P. Design and tests of a multi-pin flexible seedling pick-up gripper for automatic transplanting. *Applied Engineering in Agriculture*, 2019, **35**(6): 949–957
5. Ma G X, Mao H P, Han L, Liu Y, Gao F. Reciprocating mechanism for whole row automatic seedling picking and dropping on a transplanter. *Applied Engineering in Agriculture*, 2020, **36**(5): 751–766
6. Grande G, Hidalgo-Reyes M, Cruz P, Velázquez N. Evolution and technological development of automatic transplanters for vegetables: a review. *INMATEH Agricultural Engineering*, 2024, **72**(1): 830–847
7. Yue R C, Yao M J, Zhang T F, Shi J W, Zhou J H, Hu J P. Design and experiment of dual-row seedling pick-up device for high-speed automatic transplanting machine. *Agriculture*, 2024, **14**(6): 942
8. Shi J W, Hu J P, Li J, Liu W, Yue R C, Zhang T F, Yao M J. Design and experiment of planting mechanism of automatic transplanter for densely planted vegetables. *Agriculture*, 2024, **14**(8): 1357
9. Zhou M L, Shan Y Y, Xue X L, Yin D Q. Theoretical analysis and development of a mechanism with punching device for transplanting potted vegetable seedlings. *International Journal of Agricultural and Biological Engineering*, 2020, **13**(4): 85–92
10. Yue R C, Hu J P, Liu Y J, Yao M J, Zhang T F, Shi J W. Design and working parameter optimization of pneumatic reciprocating seedling-picking device of automatic transplanter. *Agriculture*, 2022, **12**(12): 1989
11. URBINATI Nursery Technology. RW32 Robotic Transplanters. *URBINATI*, 2025. Available at URBINATI website on September 5, 2025
12. TTA-ISO. FlexPlanter. *TTA-ISO*, 2025. Available at TTA-ISO website on September 5, 2025
13. KUBOTA Corporation. Full-Automatic Vegetable Transplanter VEGETA. *KUBOTA*, 2025. Available at KUBOTA website on September 5, 2025 (in Japanese)
14. YANMAR Holdings Co., Ltd. PF2R Transplanter. *YANMAR Holdings Co., Ltd.*, 2025. Available at YANMAR website on September 5, 2025
15. Xie S Y, Yang S H, Liu J, Song L, Xie Q J, Duan T Y. Development of the seedling taking and throwing device with oblique insertion and plug clipping for vegetable transplanters. *Transactions of the Chinese Society of Agricultural Engineering*, 2020, **36**(6): 1–10 (in Chinese)
16. Ma X X, Li H, Cao W B, Yu S Y, Li S F. Optimization and experiment of working parameters of automatic seedling picking device for tomato seedlings transplanting. *Transactions of the Chinese Society of Agricultural Engineering*, 2020, **36**(10): 46–55 (in Chinese)
17. Yu G H, Chen Z W, Zhao Y, Sun L, Ye B L. Study on vegetable

plug seedling pick-up mechanism of planetary gear train with ellipse gears and incomplete non-circular gear. *Journal of Mechanical Engineering*, 2012, **48**(13): 32–39 (in Chinese)

18. Yu Y X, Luo C X, Yu G H, Zhao X, Yu T F. Parameters optimization of pick-up mechanism of planetary gear train with ellipse gears and incomplete non-circular gear. *Transactions of the Chinese Society for Agricultural Machinery*, 2013, **44**(6): 62–68 (in Chinese)
19. Zhou H L, Liu J G, Yu G H, Qi P, Wang L, Zheng J. Design and experiment of seedling picking mechanism for helical gear-non circular gear planetary gear system. *Transactions of the Chinese Society for Agricultural Machinery*, 2023, **54**(8): 77–86 (in Chinese)
20. Han L H, Mao H P, Hu J P, Kumi F. Development of a riding-type fully automatic transplanter for vegetable plug seedlings. *Spanish Journal of Agricultural Research*, 2019, **17**(3): e0205
21. Zhao X Q, Yang Q Z, Huang G L, He M S, Mao H P. Design and test of picking seedling mechanism of small full-automatic transplanter for plug seedlings. *Journal of Jiangsu University (Natural Science Edition)*, 2022, **43**(1): 54–61 (in Chinese)
22. Liao Q X, Zhang Z, Hu Q L, Xu B. Design and trajectory analysis of pneumatic picking-up mechanism for rape paper pot seedling. *Transactions of the Chinese Society for Agricultural Machinery*, 2017, **48**(11): 70–78 (in Chinese)
23. Yin D Q, Wang J Z, Zhou M L, Yang Y C, Wang J W. Optimal design and experiment of vegetable potted seedlings pick-up mechanism for exploring and picking-pushing plugs. *Transactions of the Chinese Society for Agricultural Machinery*, 2019, **50**(10): 64–71 (in Chinese)
24. Xin L, Wang M C, Sun G Y, Zhang H, Sun M Y, Wang H. Design and experiment of extensible type of picking seedling pot mechanism for tomato pot seedling transplanting. *Transactions of the Chinese Society for Agricultural Machinery*, 2024, **55**(3): 96–105 (in Chinese)
25. Zhou M L, Sun H, Xu X, Yang J J, Wang G B, Wei Z X, Xu T B, Yin J J. Study on the method and mechanism of seedling picking for pepper (*Capsicum annuum* L.) plug seedlings. *Agriculture*, 2023, **14**(1): 11
26. Ferrari Growtech. FUTURA and FUTURA TWIN Automatic Transplanters. *Ferrari Growtech*, 2025. Available at Ferrari Growtech website on September 5, 2025
27. Checchi & Magli. Transplanters. *Checchi & Magli*, 2025. Available at Checchi & Magli website on September 5, 2025
28. Visser Horti Systems B.V. PC-21. *Visser Horti Systems*, 2025. Available at Viscon Group website on September 5, 2025
29. Hu J P, Liu Y T, Liu W, Zhang S W, Han L H, Zeng T Y. Experiment on combined seedling picking device with top clamping and pulling. *Transactions of the Chinese Society for Agricultural Machinery*, 2022, **53**(S1): 110–117, 184 (in Chinese)
30. Zhang X D. Design and Experiment of Automatic Feeding Device for Ejector and Clamp Vegetable Hole Tray Seedlings. Beijing: *Chinese Academy of Agricultural Mechanization Sciences*, 2024 (in Chinese)
31. Mao H P, Ma G X, Han L H, Hu J P, Gao F, Liu Y. A whole row automatic pick-up device using air force to blow out vegetable plug seedlings. *Spanish Journal of Agricultural Research*, 2020, **18**(4): e0211
32. Visser Horti Systems BV. Pic-O-Mat PFS-8. *Visser Horti Systems*, 2025. Available at Viscon Group website on September 5, 2025
33. TTA-ISO. CuttingEdge. *TTA-ISO*, 2025. Available at TTA-ISO website on September 5, 2025
34. Li H, Ma X X, Cao W B, Li S F, Zhou W J. Design and experiment of seedling picking mechanism by stem clipping for tomato plug seedling. *Transactions of the Chinese Society of Agricultural Engineering*, 2020, **36**(21): 39–48 (in Chinese)
35. Chen J N, Zhang X W, Liu L M, Ma X X, Yao K, Cheng D. Design and experiments of the clipping-stem type non-circular gear transplanting mechanism for corn pot seedlings. *Transactions of the Chinese Society of Agricultural Engineering*, 2023, **39**(18): 30–40 (in Chinese)
36. Ren Z Y, Yan W, Ji Y, Li K, Zhou X Z, Zhang W Y, Hu M J. Optimized design and experiment of the seedling picking mechanism for stem-clipping for pepper hole tray seedlings. *Transactions of the Chinese Society of Agricultural Engineering*, 2025, **41**(1): 55–64 (in Chinese)
37. Wei Z Q, Song L, Yang S H, Liu J, Xie S Y. Optimum design and test of stem clamping type seeding picking and throwing mechanism for plug seedlings. *Journal of Southwest University (Natural Science Edition)*, 2022, **44**(4): 88–99 (in Chinese)
38. Wang X, Liu M Z, Zhai C Y, Han C J, Yang S, Gao Y Y. Design and experiment of vegetable transplanting clip stem seedling device. *Transactions of the Chinese Society for Agricultural Machinery*, 2023, **54**(9): 122–132 (in Chinese)
39. Han C J, Zhou T, You J, Xu Y, Mao H P, Liang J. Design and experiments of an arc expansion type automatic seedling taking and throwing device for vegetable plug seedlings. *Transactions of the Chinese Society of Agricultural Engineering*, 2023, **39**(8): 54–64 (in Chinese)
40. Hai W B, Li H M, Dong A H, Yang Y, Zhang B Q, Yuan Z H. Design and experiment of the picking component of eggplant bowl seedling transplanter. *Journal of Chinese Agricultural Mechanization*, 2025, **46**(1): 30–35 (in Chinese)
41. Spagnuolo M, Todde G, Caria M, Furnitto N, Schillaci G, Failla S. Agricultural robotics: a technical review addressing challenges in sustainable crop production. *Robotics*, 2025, **14**(2): 9
42. Zhang M, Feng J, Gong C Y, Han B. Analysis on ejector seedlings mechanism of automatic dry farmland transplanting machine. *Journal of Agricultural Mechanization Research*, 2014, **36**(3): 85–89 (in Chinese)

43. Yuan T, Wang D, Wen Y S, Zhu S S, Chen Y, Tan Y Z. Design and experiment of seedlings unloading mechanism based on methods of air-blowing and vibration for vegetable transplanter. *Transactions of the Chinese Society for Agricultural Machinery*, 2019, **50**(10): 80–87 (in Chinese)
44. Wang C, Liu C L, Li Y L, Song J N, Wang J C, Dong X Q. Design and experiment of pneumatic punching high-speed seedling picking device for vegetable transplanter. *Transactions of the Chinese Society for Agricultural Machinery*, 2021, **52**(5): 35–43, 51 (in Chinese)
45. Yao S B, Liu J X, Zeng J X, Shi Q, Zhao C Y, He X. Design of taking-combined-with-vibration-type seedlings unloading mechanism of vegetable transplanter. *Agricultural Equipment & Vehicle Engineering*, 2022, **60**(1): 70–73 (in Chinese)
46. Li P F, Yun Z H, Gao K H, Si L Q, Du X W. Design and test of a force feedback seedling pick-up gripper for an automatic transplanter. *Agriculture*, 2022, **12**(11): 1889
47. Yao M J, Hu J P, Liu W, Shi J W, Jin Y W, Lv J P, Sun Z T, Wang C. Precise servo-control system of a dual-axis positioning tray conveying device for automatic transplanting machine. *Agriculture*, 2024, **14**(8): 1431
48. Ji D, Liu L M, Zeng F D, Zhang G T, Liu Y Z, Diao H W, Tian S B, Zhao Z H. Design and experimental study of a traction double-row automatic transplanter for *Solanum* Lycopersicum seedlings. *Horticulturae*, 2024, **10**(7): 692
49. Wang L, Lin Z W, Zhou Z H, Yu G H, Yang Z Y, Yu X F, Ye B L. Design and experiment of a vegetable plug seedling planting mechanism combining non-circular gear system and multi-link. *International Journal of Agricultural and Biological Engineering*, 2025, **18**(3): 124–134
50. Du X W, Yun Z H, Jin X, Li P F, Gao K H. Design and experiment of automatic adjustable transplanting end-effector based on double-cam. *Agriculture*, 2023, **13**(5): 987
51. Sharma A, Khar S. Mechanics for seedling feeding in vegetable transplanters: design and development of semi-automatic systems. *Spanish Journal of Agricultural Research*, 2024, **22**(4): 21168
52. Wang R C, Zhang K Q, Ding R K, Jiang Y, Jiang Y Y. A novel hydraulic interconnection design and sliding mode synchronization control of leveling system for crawler work machine. *Agriculture*, 2025, **15**(2): 137
53. Jiang D L, Gu S, Chu Q, Yang Y L, Gu M Z, Yang Y. Pneumatic separation system for collected seedlings using subdivided air streams. *International Journal of Agricultural and Biological Engineering*, 2022, **15**(2): 84–92
54. Liu J Z, Zhao S Y, Li N, Faheem M, Zhou T, Cai W J, Zhao M Z, Zhu X Y, Li P P. Development and field test of an autonomous strawberry plug seeding transplanter for use in elevated cultivation. *Applied Engineering in Agriculture*, 2019, **35**(6): 1067–1078
55. Han L H, Zhang M J, Wang Y, Ma G X, Yang Q Z, Liu Y. Design and tests of a large-opening flexible seedling pick-up gripper with multiple grasping pins. *Agronomy*, 2025, **15**(7): 1634
56. Ma G X, Chen X, Liu Y, Han L H, Mao H P, Hu J P. Airflow ejection-wrapped clamping type seedling picking method and parameter optimization. *Frontiers in Plant Science*, 2023, **13**: 1084563
57. Li G X, Xu Y, Han C J, Liang J, Luo Y, Mao H P, Cao G Q. Design and experiment of the follow-up seedling picking and depositing mechanism for the pepper plug seedling transplanter. *Agriculture*, 2025, **15**(19): 2026
58. Bai H B, Li X Y, Zeng F D, Cui J, Zhang Y Z. Study on the impact damage characteristics of transplanting seedlings based on pressure distribution measurement system. *Horticulturae*, 2022, **8**(11): 1080
59. Hu S Y, Hu M J, Zhang W Y. Design and experiment of flexible clamping device for pepper plug seedlings. *Advances in Mechanical Engineering*, 2022, **14**(6): 1–11
60. Gallegos-Cedillo V M, Nájera C, Signore A, Ochoa J, Gallegos J, Egea-Gilabert C, Gruda N S, Fernández J A. Analysis of global research on vegetable seedlings and transplants and their impacts on product quality. *Journal of the Science of Food and Agriculture*, 2024, **104**(9): 4950–4965
61. Hu Q L, Liao Q X, Wang Y. Mechanical and biological characteristics analysis of mechanically transplanted rapeseed substrate block seedlings. *Transactions of the Chinese Society of Agricultural Engineering*, 2019, **35**(24): 58–65 (in Chinese)
62. Gong B B, Wang N, Zhang T J, Wu X L, Lv G Y, Chu X P, Gao H B. Selection of tomato seedling index based on comprehensive morphology and leaf chlorophyll content. *Transactions of the Chinese Society of Agricultural Engineering*, 2019, **35**(8): 237–244 (in Chinese)
63. Hu S Y, Hu M J, Zhang W Y, Jiang Z. Experimental and simulation study on mechanical properties of stem of pepper hole seedlings. *Journal of Chinese Agricultural Mechanization*, 2022, **43**(3): 9–18 (in Chinese)
64. Zhao C Y, Guo J X, Liu N, Wang Y. Experimental study on mechanical properties and seedling pulling performance of pepper seedlings. *Journal of Agricultural Mechanization Research*, 2021, **43**(6): 172–178 (in Chinese)
65. Han C J, Guo H, Yang W Z. Study on the characteristics of pepper plug seedling dropping. *Journal of Agricultural Mechanization Research*, 2015, **37**(6): 197–200 (in Chinese)
66. Han L H, Mao H P, Hu J P, Miao X H, Tian K P, Yang X J. Experiment on mechanical property of seedling pot for automatic transplanter. *Transactions of the Chinese Society of Agricultural Engineering*, 2013, **29**(2): 24–29 (in Chinese)
67. Ma R J, Xiao J Q, Zheng P F, Zhang Y L, Chen Y, Qiu Z. Experimental study on characteristics of creep and stress relaxation for rice seedling stem raised in cell tray. *Transactions of the Chinese Society of Agricultural Engineering*,

2018, **34**(13): 43–53 (in Chinese)

68. Trachsel S, Kaeppler S M, Brown K M, Lynch J P. Shovelomics: high throughput phenotyping of maize (*Zea mays* L.) root architecture in the field. *Plant and Soil*, 2011, **341**(1–2): 75–87
69. Bucksch A, Burridge J, York L M, Das A, Nord E, Weitz J S, Lynch J P. Image-based high-throughput field phenotyping of crop roots. *Plant Physiology*, 2014, **166**(2): 470–486
70. Fang S Q, Yan X L, Liao H. 3D reconstruction and dynamic modeling of root architecture *in situ* and its application to crop phosphorus research. *The Plant Journal*, 2009, **60**(6): 1096–1108
71. Luo X W, Zhou X C, Yan X L, Luo L P, Xiang Z Y. Visualization of plant root morphology in *situ* based on X-ray CT imaging technology. *Transactions of the Chinese Society for Agricultural Machinery*, 2004, **35**(2): 104–106, 133 (in Chinese)
72. Wang J D, Chen Y L, Zhang Y E, Zhang Y C, Ai Y C, Feng Y P, Moody D, Diggle A, Damon P, Rengel Z. Phenotyping and validation of root morphological traits in barley (*Hordeum vulgare* L.). *Agronomy*, 2021, **11**(8): 1583
73. Kumi F, Mao H P, Li Q L, Han L H. Assessment of tomato seedling substrate-root quality using X-ray computed tomography and scanning electron microscopy. *Applied Engineering in Agriculture*, 2016, **32**(4): 417–427
74. Han L H, Ma H R, Mo M H, Kumi F, Hu J P, Mao H P. Design and test of an efficient seedling pick-up device with a combination of air jet ejection and mechanical action. *Journal of Agricultural Engineering*, 2024, **55**(3): 1575
75. Jiang L, Tang Q, Wu J, Yu W Y, Zhang M, Jiang D, Wei D X. Design and test of seedbed preparation machine before transplanting of rapeseed combined transplanter. *Agriculture*, 2022, **12**(9): 1427
76. Zhang X X, Zhang Y, Wang Z Y, Gong C H, Leng S H, Zuo Q S, Yang G. Effect of transplanting periods on post-planting growth and yield of rapeseed blanket seedlings. *Chinese Journal of Oil Crop Sciences*, 2025, **47**(3): 690–699 (in Chinese)
77. Wang Z Y, Leng S H, Zhang Y, Zhou X Y, Gong C H, Zuo Q S, Yang G. Research progress on seedling transplanting technology of rapeseed blan-ket-like seedlings. *Jiangsu Journal of Agricultural Sciences*, 2023, **39**(5): 1247–1255 (in Chinese)
78. Zhou B, Miao H, Guan C S, Ji X, Wang X C. Design and test of seedling-picking mechanism of fully automatic transplanting machine. *Applied Sciences*, 2024, **14**(20): 9235
79. Habineza E, Reza M N, Lee K H, Yang K H, Park S H, Lee D H, Chung S O. Kinematic analysis of a gripper-type seedling-picking mechanism for a 3.4-kW walking-type automatic pepper transplanter. *Korean Journal of Agricultural Science*, 2025, **52**(4): 529–545
80. Liu Z C, Shi L, Liu Z Y, Xing J F, Hu C, Wang X F, Wang L. Design and testing of a seedling pick-up device for a facility tomato automatic transplanting machine. *Sensors*, 2024, **24**(20): 6700
81. Jin X, Tang L M, Ji J T, Wang C L, Wang S S. Potential analysis of an automatic transplanting method for healthy potted seedlings using computer vision. *International Journal of Agricultural and Biological Engineering*, 2021, **14**(6): 162–168
82. Yuan F W, Ren G Z, Xiao Z, Sun E J, Ma G N, Chen S Y, Li Z L, Zou Z H, Wang X J. Low-damage grasp method for plug seedlings based on machine vision and deep learning. *Agronomy*, 2025, **15**(6): 1376
83. Jin X, Wang C L, Chen K K, Ji J T, Liu S, Wang Y W. A framework for identification of healthy potted seedlings in automatic transplanting system using computer vision. *Frontiers in Plant Science*, 2021, **12**: 691753
84. Zhao X, Cheng D, Dong W X, Ma X X, Xiong Y S, Tong J H. Research on the end effector and optimal motion control strategy for a plug seedling transplanting parallel robot. *Agriculture*, 2022, **12**(10): 1661
85. Zhao S Y, Liu J Z, Jin Y C, Bai Z C, Liu J L, Zhou X. Design and testing of an intelligent multi-functional seedling transplanting system. *Agronomy*, 2022, **12**(11): 2683
86. Mota A, Briga-Sá A, Valente A. Development of a wireless system to control a Trombe wall for poultry brooding. *AgriEngineering*, 2021, **3**(4): 853–867